CITY of EDGEWATER, FLORIDA

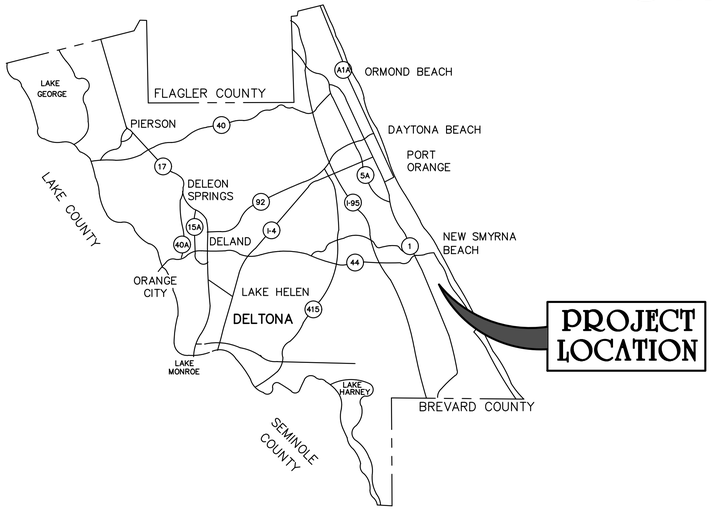

LAMONT AND HUBBELL STREET STORMWATER IMPROVEMENTS

BID No. 17-ES-003

BID SET

DECEMBER 2016

INDEX	
1	COVER SHEET – INDEX
2	KEY MAP & GENERAL NOTES
3	SURVEY – SHEET 1 OF 2
4	SURVEY – SHEET 2 OF 2
5	WEST LAMONT STREET – PLAN & PROFILE
6	EAST LAMONT STREET – PLAN & PROFILE
7	HUBBELL STREET – PLAN & PROFILE
8	BAFFLE BOX DETAIL
9	STANDARD DETAILS – WATER
10	STANDARD DETAILS – WATER
11	STANDARD DETAILS – STORM
12	STANDARD DETAILS – STORM
13	M.O.T. DETAILS
14	DETOUR PLAN

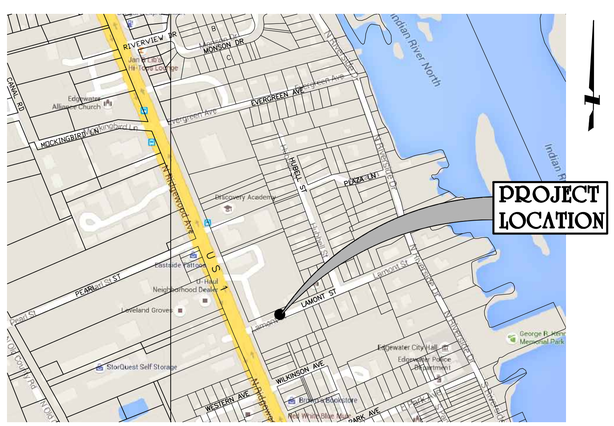

(SECTION 51 & 52, TOWNSHIP 17 SOUTH, RANGE 34 EAST)

VICINITY MAP

GRAPHIC SCALE

400 0 200 400 800

1 INCH = 400 FT.

MAYOR:	MICHAEL IGNASIAK
DISTRICT 1 COUNCILWOMAN:	CHRISTINE POWER
DISTRICT 2 COUNCILWOMAN:	AMY VOGT
DISTRICT 3 COUNCILMAN:	DAN BLAZI
DISTRICT 4 COUNCILMAN:	GARY CONROY
CITY MANAGER:	TRACEY BARLOW

ATTENTION IS DIRECTED TO THE FACT THAT THESE PLANS MAY HAVE BEEN ALTERED IN SIZE BY REPRODUCTION. THIS MUST BE CONSIDERED WHEN OBTAINING SCALED DATA.

FLORIDA CERTIFICATE–of–AUTHORIZATION No. 626
PHONE: (386) 761–6810 FAX: (386) 761–3977
P.O. DRAWER 290247, PORT ORANGE, FLORIDA 32129–0247

Prepared by:
QUENTIN L. HAMPTON ASSOCIATES, INC.
CONSULTING ENGINEERS
P.O. DRAWER 290247 PORT ORANGE, FL. 32129-0247
(386) 761-6810

ENGINEER OF RECORD: ANDREW M GIANNINI, P.E.

P.E. NO.: 46601

POTABLE WATER DESIGN AND CONSTRUCTION NOTES

1. THE CITY'S PUBLIC UTILITIES DEPARTMENT (424–2460) SHALL BE GIVEN A MINIMUM OF 48 HOURS ADVANCE NOTICE (NOT INCLUDING HOLIDAYS OR WEEKENDS) PRIOR TO BEGINNING ANY POTABLE WATER SYSTEM CONSTRUCTION.
2. DEWATERING SHALL BE PROVIDED TO KEEP GROUNDWATER ELEVATION A MINIMUM OF 6 INCHES BELOW WATER MAIN BEING LAID
3. ALL WATER MAINS SHALL BE LAID ON A FIRM FOUNDATION WITH ALL UNSUITABLE MATERIAL (MUCK, ROCK, COQUINA, ETC.) REMOVED AND REPLACED WITH CLEAN GRANULAR MATERIAL.
4. TRENCHES SHALL BE BACKFILLED WITH MATERIAL ACCEPTABLE TO THE CITY WITH A MINIMUM COMPACTION OF 98% IN PAVED AREAS AND 95% IN UNPAVED AREAS IN ACCORDANCE WITH AASHTO T–180.
5. IT SHALL BE THE CONTRACTORS RESPONSIBILITY TO ENSURE THAT TRENCH COMPACTION TESTS BE PROVIDED AT POINTS 1 FOOT ABOVE THE PIPE AND AT 1 FOOT VERTICAL INTERVALS TO FINISH GRADE, AT A MINIMUM SPACING OF EVERY 300 FEET.
6. 3" METALIZED PIPE LOCATION TAPE SHALL BE LOCATED BETWEEN 15" AND 24" BELOW FINISHED GRADE OR AS SPECIFIED BY MANUFACTURER FOR ALL PVC LINES. MARKER TAPE SHALL BE USED ON ALL DUCTILE IRON PIPE, AND 12 GAUGE TRACING WIRE AS WELL.
7. ALL SINGLE RESIDENTIAL WATER SERVICES SHALL BE 3/4", DOUBLE RESIDENTIAL SERVICES SHALL BE 1", AND COMMERCIAL SERVICES 1–1/2" OR 2". POLYETHYLENE TUBING SHALL BE USED, IN ACCORDANCE WITH THE FOLLOWING SPECIFICATIONS:
   POLYETHYLENE TUBING SHALL BE CTS 3408 HIGH DENSITY TUBING, BLUE IN COLOR, AND RATED FOR A MINIMUM OF 200 P.S.I. WITH SDR OF 9 (CTS). THE TUBING SHALL HAVE A VIRGIN HIGH DENSITY POLYETHYLENE CENTER FOR WHICH THE MANUFACTURER SHALL FURNISH A CERTIFICATE OF PURITY. THE TUBING SHALL HAVE UV PROTECTION AND SHALL NOT BE AFFECTED BY DIRECT SUNLIGHT. THE TUBING SHALL COMPLY WITH OR EXCEED THE APPLICABLE STANDARDS OF A.S.T.M. D1248, D3350, D2239, D2737, N.S.F. 14 AND A.W.W.A. C901 AND SHALL COME WITH A LIFETIME WARRANTY.
   ACCEPTABLE MANUFACTURERS: ENDOT ENDO PURE OR APPROVED EQUAL
8. ALL WATER SERVICE ENDINGS SHALL BE MARKED WITH A 2" X 4" LUMBER (PRESSURE TREATED) EXTENDING 4 FEET ABOVE GRADE, WITH WATER SERVICES SECURED 12" MAXIMUM ABOVE THE GROUND AND ANY "U" BRANCHES FOR DOUBLE SERVICES SHALL BE AT GROUND LEVEL. ALL SERVICES SHALL BE LOCKED.
9. WATER VALVES SHALL BE PLACED AT ALL STREET INTERSECTIONS AND AT MAXIMUM SPACING OF 750 FEET.
10. AT ALL WATER MAIN TEES AND CROSSES, VALVES SHALL BE INSTALLED ON ALL LEGS EXCEPT ONE.
11. APPROVED WATER VALVE TYPES ARE THE FOLLOWING:
    A. RESILIENT SEAT GATE VALVES 24" DIAMETER AND SMALLER (AWWA C–509)
    B. BUTTERFLY VALVES GREATER THAN 24" (AWWA C–504)
    C. TAPPING VALVES WITH MECHANICAL TAPPING SLEEVE.
12. ALL WATER VALVES SHALL BE ADJUSTED TO FINISHED GRADE WITH CONCRETE COLLARS AND THE CAPS PAINTED BLUE TO MAKE THEM PLAINLY VISIBLE.
13. UPON FINAL ACCEPTANCE OF NEW WATER SYSTEMS, WATER VALVES SHALL BE COMPLETELY OPENED BY PUBLIC UTILITIES PERSONNEL. AT NO TIME SHALL CONTRACTOR OPERATE ANY EXISTING VALVES.
14. TYPICALLY, A MINIMUM OF ONE FIRE HYDRANT SHALL BE LOCATED AT EVERY INTERSECTION. OTHER FIRE HYDRANTS SHALL BE LOCATED SO AS TO PRODUCE A MAXIMUM 375 FEET HOSE LAY ALONG THE STREET FOR ALL RESIDENTIAL BUILDINGS.
15. ALL FIRE HYDRANTS SHALL BE CONSTRUCTED TO MAKE THEM EASILY ACCESSIBLE TO FIRE PERSONNEL IN CASE OF A FIRE. THE PRIMARY HYDRANT PORT SHOULD ALWAYS FACE THE STREET.
16. AS STANDARD PRACTICE, WATER MAINS SHALL BE INSTALLED 4 FEET OFF THE BACK OF CURB OR AS APPROVED BY THE CITY.
17. ALL WATER MAINS SHALL BE NSF–APPROVED FOR POTABLE WATER USE, AND SHALL HAVE A MINIMUM COVER OF 36 INCHES.
18. ALL PROPOSED WATER MAINS SHALL BE FLUSHED, DISINFECTED AND BACTERIOLOGICALLY CLEARED FOR SERVICE IN ACCORDANCE WITH THE LATEST AWWA STANDARDS AND THE FLORIDA DEPARTMENT OF ENVIRONMENTAL PROTECTION REQUIREMENTS.
19. WATER MAINS SHALL BE C–900 PVC OR C–905 CL 150 (COLOR"BLUE") OR D.I.P. PRESSURE CLASS 350 STANDARD CEMENT LINED UNLESS OTHERWISE APPROVED BY THE CITY.
20. UPON CONSTRUCTION COMPLETION AND ACCEPTANCE OF THE SYSTEM, IT SHALL BE THE DESIGN ENGINEER'S RESPONSIBILITY TO ENSURE THAT THE SYSTEM IS PROPERLY CERTIFIED AND ACCEPTED BY THE DEPARTMENT OF HEALTH AND AS–BUILTS ARE PROVIDED TO THE CITY PRIOR TO ANY USE OF THIS SYSTEM .
21. WATER DISTRIBUTION SYSTEM SHALL BE DESIGNED TO COMPLY WITH THE CITY'S FIRE (WATER) FLOW CODE.
22. IN AREAS WHERE RECLAIMED WATER IS NOT AVAILABLE THE CONTRACTOR SHALL BE REQUIRED TO (UPON SATISFACTORY COMPLETION OF THE PRESSURE TEST) TRANSFER THE WATER FROM THE POTABLE WATER LINES TO THE RECLAIMED WATER LINES FOR UTILIZATION IN THEIR PRESSURE TEST.
23. IN AREAS WHERE RECLAIMED WATER IS AVAILABLE, RECLAIMED WATER WILL BE UTILIZED IN THE PRESSURE TESTING OF NEW RECLAIMED WATER LINES.
24. ALL POTABLE WATER MAINS SHALL USE A THRUST RESTRAINT JOINT METHOD IN COMPLIANCE WITH THE DUCTILE IRON PIPE RESEARCH ASSOCIATION (DIPRA) GUIDELINES. IN THE EVENT THAT PVC FITTINGS ARE SPECIFIED, THE RESTRAINT SHALL BE MODIFIED IN ACCORDANCE WITH THE RECOMMENDED ADDITIONAL RESTRAINT LENGTH REQUIRED FOR PIPE WRAPPED WITH POLYETHYLENE.
25. MEGALUGS, BOLTLESS RESTRAINED JOINTS, GRIPPER GASKETS, OR STAR GRIPS SHALL BE USED ON ALL RESTRAINED JOINT INSTALLATIONS. MINIMUM DEPTH OF BURY ON PIPES NOT MEETING REQUIRED COVER REQUIREMENTS SHALL FOLLOW THE MOST RECENT DIPRA THRUST RESTRAINT DESIGN GUIDELINES.
26. GRIPPER RING GASKETS BY ROMAC AND OR STAR AU–GRIP MAY BE USED AS APPROPRIATE FOR RESTRAINING PRESSURE PIPE TO FITTINGS, VALVES, ETC.
27. WATER SYSTEMS SHALL BE PRESSURE TESTED AT 150 PSI STATIC PRESSURE FOR A PERIOD OF 4 HOURS PER AWWA STANDARDS.
28. ALL WATER SERVICES SHALL BE MARKED WITH AN "/\" SAW CUT INTO THE CURB AND METAL TABS SET INTO THE PAVEMENT.
29. ALL WATER VALVES SHALL BE MARKED WITH AN "X" SAW CUT INTO THE CURB AND METAL TABS SET INTO THE PAVEMENT. BLOW–OFFS SHALL BE MARKED SIMILARLY, AS WELL.
30. WATER SERVICES SHALL BE NORMALLY DOUBLE 1" SERVICES LOCATED AT SIDE LOT LINES. IN INSTANCES WHERE SERVICES NEED TO BE OFFSET, 3/4" SINGLE SERVICES SHALL BE SPECIFIED. THESE SERVICES MAY BE OFFSET A MAXIMUM OF 2.0' FROM SIDE LOT LINES.
31. ALL TAPPING OF MAINS SHALL BE SUPERVISED BY THE CITY SCHEDULING OF THESE CONNECTIONS SHALL REQUIRE A MINIMUM 48 HOUR NOTIFICATION (MEASURED ON NORMAL WORK DAYS) DIRECTED TO THE CITY'S DESIGNATED SITE INSPECTOR. THE CONNECTION SHALL BE SCHEDULED TO COMMENCE BETWEEN 8:00 A.M. AND NOON ON THE APPROPRIATE DAY.
32. ALL PROPOSED POTABLE WATER MAINS SHALL BE FLUSHED, DISINFECTED, PRESSURE TESTED AND BACTERIOLOGICALLY CLEARED FOR SERVICE WHEN APPROPRIATE IN ACCORDANCE WITH THE LATEST AWWA STANDARDS AND THE FLORIDA DEPARTMENT OF ENVIRONMENTAL PROTECTION REQUIREMENTS. THE CONTRACTOR SHALL NOTIFY THE CITY'S DESIGNATED SITE INSPECTOR WHO SHALL COORDINATE WITH CITY PERSONNEL AT THE WATER TREATMENT PLANT AT LEAST 48 HOURS PRIOR TO BEGINNING FLUSH OF THE MAINS PRIOR TO THE COMMENCEMENT OF PRESSURE TESTING.
33. THE CONTRACTOR SHALL BE REQUIRED TO PIG ALL POTABLE MAINS IN EXCESS OF 8" IN DIAMETER AND PRIMARY DISTRIBUTION MAINS LOCATED ON COLLECTOR AND ARTERIAL ROADWAYS. LAUNCHING AND EXTRACTION POINTS SHALL BE DETERMINED BY THE CONTRACTOR.
34. WITH RESPECT TO TIE–IN CONNECTIONS , THE CITY RESERVES THE RIGHT TO REQUIRE CONNECTIONS TO BE PERFORMED DURING PERIODS OF LOW FLOW (MIDNIGHT TO 6:00 A.M.) IN ORDER TO MINIMIZE SERVICE DISRUPTION TO EXISTING CUSTOMERS.
35. ALL WORK PERFORMED UPON POTABLE WATER FACILITIES OWNED OR PROPOSED TO BE OWNED BY THE CITY SHALL BE CONSTRUCTED BY AN UNDERGROUND UTILITY CONTRACTOR OR GENERAL CONTRACTOR LICENSED IN THE STATE OF FLORIDA AND REGISTERED WITH THE CITY.
36. FOR CONSTRUCTION PURPOSES, THE PLANS SHALL DIMENSION THE PROPOSED LOCATIONS OF ALL WATER MAINS MEASURED FROM THE BACK OF CURB (OR EDGE OF PAVEMENT, IF NO CURB IS USED).
37. POTABLE WATER SYSTEM EXTENSIONS MAY NOT BE USED PRIOR TO FINAL TESTING, CLEARANCE AND ACCEPTANCE BY THE CITY OF EDGEWATER. THIS INCLUDES CONSTRUCTION WATER REQUIRED FOR SEWER LINE CLEANING OR RELATED USES.
38. ALL H.D.P.E. PIPE UTILIZED FOR WATER, FORCE MAIN AND/OR RECLAIMED WATER MAIN EXTENSIONS SHALL BE S.D.R. 11 UNLESS SPECIFICALLY NOTED OTHERWISE. THE HDPE PIPE SHALL BE SIZED TO MATCH THE EXTERNAL DIAMETER OF THE PVC OR DIP PIPE TO WHICH IT IS ATTACHED.
39. LANDSCAPE PLANS SHALL CLEARLY DEPICT THE DESIGN LOCATION OF PLANTINGS RELATIVE TO THE LOCATION OF PUBLIC UTILITIES AND STORMWATER INFRASTRUCTURE IN ORDER TO EVALUATE POTENTIAL CONFLICTS.
40. ALL VALVES 2" AND LARGER SHALL BE STANDARD 2" BOX VALVES (CORP STOPS ARE NOT ACCEPTABLE).
41. WHERE POTABLE WATER AND SANITARY SEWER MAINS CROSS WITH LESS THAN EIGHTEEN (18) INCHES OF VERTICAL CLEARANCE OR WHERE THE SEWER MAIN IS ABOVE THE WATER MAIN, THE SEWER MAIN SHALL BE ENCASED WITH CONCRETE OR ENCLOSED IN A WATER TIGHT CARRIER PIPE, OR UPGRADED TO DUCTILE IRON PIPE OR PRESSURE RATED PVC PIPE (MEETING THE AWWA C–900 OR C905 SPECIFICATION) FOR A MINIMUM LENGTH OF (20) FEET, CENTERED ON THE POINT OF CROSSING. A MINIMUM HORIZONTAL SEPARATION OF (10) TEN FEET (EDGE TO EDGE) BETWEEN POTABLE WATER MAINS AND SEWER MAINS SHALL BE MAINTAINED WHEN AT ALL POSSIBLE. WHEN THE 10–FOOT HORIZONTAL SEPARATION CANNOT BE MAINTAINED THE WATER MAIN SHALL BE INSTALLED IN A SEPARATE TRENCH OR ON AN UNDISTURBED EARTH SHELF AT LEAST 18" ABOVE THE SEWAGE MAIN. ALTERNATIVELY, THE SEWER MAIN SHALL BE ENCASED WITH CONCRETE OR ENCLOSED IN A WATER TIGHT CARRIER PIPE, OR UPGRADED TO DUCTILE IRON PIPE OR PRESSURE RATED PVC PIPE (MEETING THE AWWA C–900 OR C–905 SPECIFICATION) AND PRESSURE TESTED.

STATIONING DISCLAIMER:
THE BASELINE STATIONING SHOWN ON THE PRO□ECT PLANS IS FOR REFERENCE AND INFORMATIONAL PURPOSES ONLY AND SHOULD NOT BE USED FOR PRO□ECT SITE SURVEY LAYOUT OR DIMENSIONING.

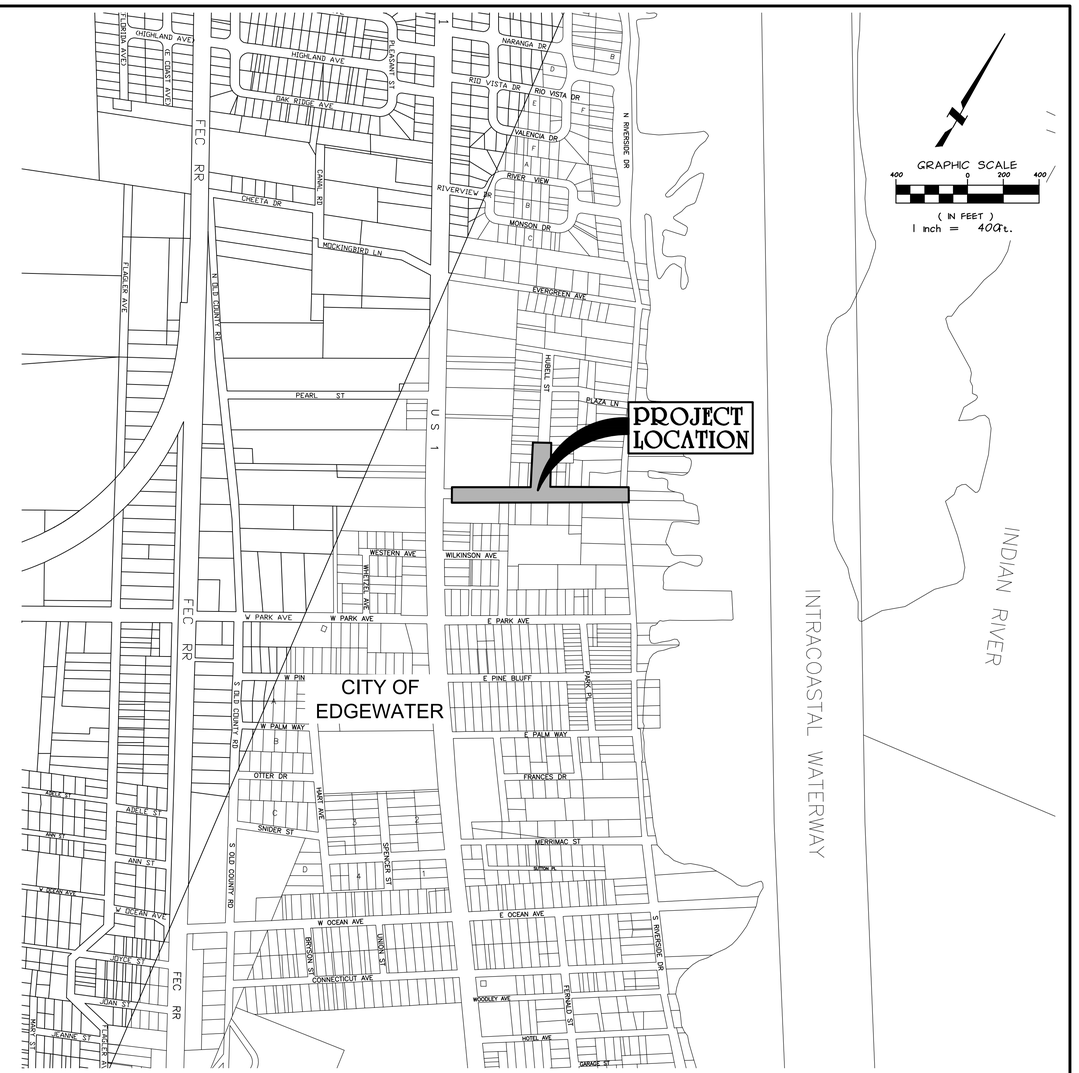

UTILITY INFORMATION PROVIDED TO OR COLLECTED BY QLH DURING DESIGN										
UTILITY TYPE	UTILITY COMPANY	CONTACT	PHONE	E–MAIL	PRELIMINARY PLANS PROVIDED TO UTILITY (DATE)	INFORMATION QUALITY LEVEL AND DATE RECEIVED/CONVEYED				FINAL PLANS PROVIDED TO UTILITY (DATE)
						LEVEL A/4	LEVEL B/4	LEVEL C/4	LEVEL D/4	
WATER	CITY OF EDGEWATER	BOBBY COPELAND	(386) 424–2400 x4007	BCOPELAND@ CITYOFEDGEWATER.ORG	2–2–16					12–14–16
WASTEWATER	CITY OF EDGEWATER	BOBBY LARAMORE	(386) 424–2400 x4007	BLARAMORE@ CITYOFEDGEWATER.ORG	2–2–16					12–14–16
ELECTRIC DISTRIBUTION	FPL	MARIANNE DILLARD	(407) 328–1922	MARIANNE.DILLARD@FPL.COM	2–2–16				2–8–16	12–14–16
GAS	FL PUBLIC UTILITIES	JOHNNY HILL	(386) 668–9319	DSCRIBBEN@FPUC.COM	2–2–16					12–14–16
PHONE	AT&T	KIRBY SPENCER	(386) 281–6957	KS2488@ATT.COM	2–2–16					12–14–16
TV CABLE	BRIGHTHOUSE NETWORKS	BEN TWYMAN	(386) 527–6836	BEN.TWYMAN@ MYBRIGHTHOUSE.COM	2–2–16					12–14–16

FDOT NOTES:
1) ALL CONSTRUCTION WITHIN FDOT RIGHT–OF–WAY SHALL CONFORM TO THE LATEST EDITIONS OF THE FDOT DESIGN STANDARD INDICES, THE FDOT STANDARD SPECIFICATIONS FOR ROAD AND BRIDGE CONSTRUCTION, AND THE FDOT UTILITY ACCOMMODATIONS MANUAL.
2) REMOVED SIDEWALKS WITHIN FDOT RIGHT–OF–WAY SHALL BE RESTORED TO FDOT REQUIREMENTS.

No.	BY	REVISIONS	DATE	No.	BY	REVISIONS	DATE

QUENTIN L. HAMPTON ASSOCIATES, INC.
CONSULTING ENGINEERS
FLORIDA CERTIFICATE–of–AUTHORIZATION No. 626
PHONE: (386) 761–6810 FAX: (386) 761–3977

CITY of EDGEWATER
VOLUSIA COUNTY, FLORIDA

LAMONT AND HUBBELL STREET STORMWATER IMPROVEMENTS
PROJECT No. EW111

KEYMAP □ GENERAL NOTES
DRAWN BY: MS

ANDREW M. GIANNINI, P.E.
FLORIDA REGISTRATION #46601

S:\EW\EW111 Lamont & Hubbell Area Stormwater Improvements\Production\Design\EW111 100% Plans.dwg 12/14/2016 11:39:13 AM, DWG To PDF.pc3

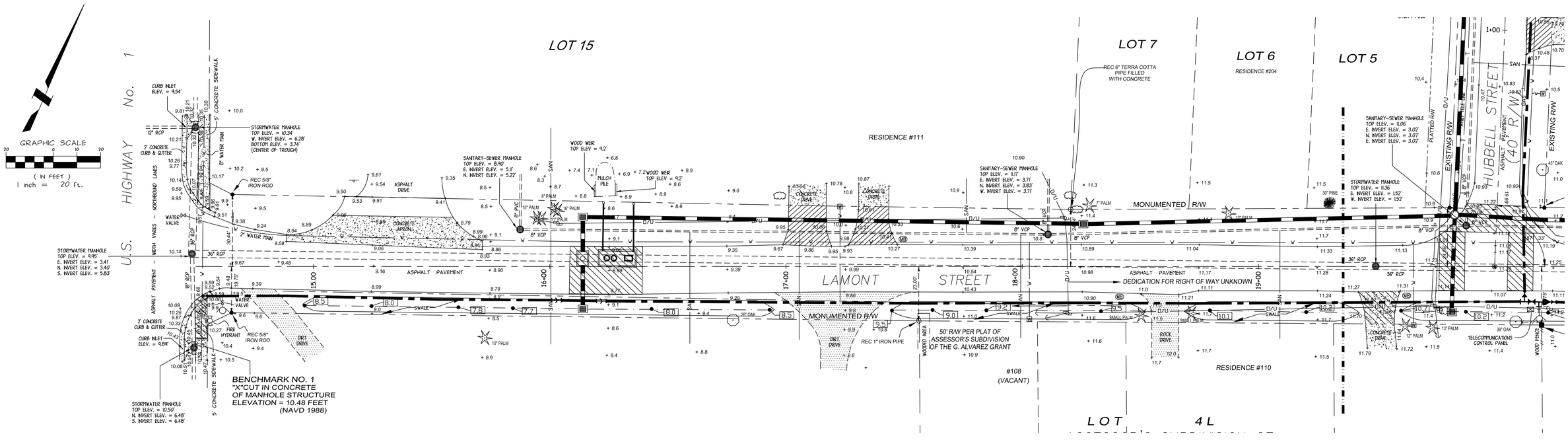

PLAT OF TOPOGRAPHIC SURVEY OF

"LAMONT STREET" AND A PORTION OF "HUBBELL STREET"
EDGEWATER, VOLUSIA COUNTY, FLORIDA

SURVEY REPORT:

1. Limits and scope of Topographic Survey identified by Michael Stephenson Quentin L. Hampton Associates, Inc.
2. Subject to restrictions, reservations, limitations, easements and rights of way, if any, appearing of record.
3. This map of survey and report prepared without the benefit of an abstract and no title work has been performed or provided to this surveyor.
4. This map of survey and report is subject to any facts that may be disclosed by a full and accurate title search.
5. The location of any subsurface foundations, improvements, features or utilities which may or may not exist and which may or may not violate deed or easement lines are not determined or addressed by this survey.
6. Dimensions indicated hereon are in U.S. standard feet and decimals thereof, unless otherwise noted.
7. Elevations indicated hereon are in U.S. standard feet and decimals referenced to **North American Vertical Datum 1988** and are based on United States Coastal and Geodetic Survey monument U-211, published elevation 12.80 feet.
8. Coordinates shown hereon refer to the Florida State Plane Coordinate System - East Zone, NAD 83 (1990 adjustment).
9. Features shown by symbol as indicated are not to scale.
10. Drawing distance between features and property line may be exaggerated for clarity.
11. Unless otherwise noted, the monumentation has no identification number or name.
12. The locations of existing underground facilities shown on this plat are approximate. The information is based on the facility owner's record drawing and/or field location work done by this surveyor. Underground location was requested from "Call Sunshine" on 06/09/2015 (Ticket #160508179) and 06/09/2015 (Ticket #160508293). This surveyor did no exploratory excavation. It is the contractor's responsibility to locate all underground facilities prior to construction. Contractor/Owner to verify underground location by "Call Sunshine" 1-800-432-4770, prior to construction.
13. All Underground telecommunication lines (Bright House Networks, Florida Power & Light, AT&T) were <u>not</u> marked.
14. The intended topographic features located and shown on this survey are those, which are among the intended features list shown hereon and are observable by above ground visual observation.
15. Trees ≥6" dbh (diameter at breast height, inches) located per clients request.
16. "Right-of-Way by General Acceptance" indicates a right-of-way line that has not been expressly shown on instruments of record, but has, by virtue of having been generally accepted by common report by local surveyors and in general being the line maintained to by the City of Edgewater over the years, become the apparent right-of-way line. This line typically lays 25 feet each side of the centerline of the existing asphalt pavement. The position of this right-of-way line is subject to possible disagreement by adjoining landowners, therefore, this survey does not in any way guarantee the legal status of said right-of-way line, but is only an opinion of this land surveyor.
17. Hubbell Street is shown on plat of Edgewater Highlands (Map Book 7, Page 107) as a 60-foot right of way was narrowed to a 40-foot right-of-way per City of Edgewater Ordinance No. 65, approved May 10, 1954.
18. The portion of Lamont Street lying south of Lot 15, Assessor's Subdivision of the G. Alvarez Grant (Map Book 3, Page 137) is shown on said plat of the Assessor's Subdivision of the G. Alvarez Grant as a 50-foot right-of-way. Dedication for right-of-way of the easterly extension of Lamont Street to South Riverside Drive is unknown and not provided. The monumented right of way are not parallel.
19. Additions or deletions to this survey map or report by other than the signing party or parties is prohibited without written consent of the signing party or parties per F.A.C. Rule 5J-17.051(3)(b)6.
20. The survey map and report or copies thereof are not valid without the signature and the original raised seal of a Florida licensed surveyor and mapper.

CERTIFIED TO: QUENTIN L. HAMPTON ASSOCIATES, INC.

NOTE: ALL TELECOMMUNICATIONS LINES NOT MARKED

BURIED UTILITIES NOTE

BURIED UTILITIES ARE SHOWN AT THEIR APPROXIMATE LOCATION BASED UPON INFORMATION OBTAINED FROM UTILITY COMPANIES AND FIELD EVIDENCE. OTHER BURIED UTILITIES MIGHT EXIST ON THE SUBJECT SITE WHICH ARE NOT SHOWN ON THIS DRAWING. USE EXTREME CAUTION DURING EXCAVATION PROCEDURES AND CONTACT SUNSHINE STATEONE, @ 1-800-432-4770 FOR EXACT LOCATION OF BURIED FACILITIES PRIOR TO EXCAVATION OPERATIONS.

LEGEND & ABBREVIATIONS FOR TOPOGRAPHIC FEATURES INTENDED TO BE SURVEYED A

MB	DENOTES MAILBOX	+ 8.0	DENOTES S
	DENOTES SPRINKLER (ALL SPRINKLERS NOT LOCATED)		DENOTES U
VCP	DENOTES VITREOUS CLAY PIPE		DENOTES G
	DENOTES SIGN	D/U	DENOTES O
	DENOTES WATER SERVICE FROM METER	T	DENOTES T
W	DENOTES WATER SERVICE	W	DENOTES W
SAN	DENOTES SANITARY-SEWER SERVICE	C	DENOTES C
	DENOTES TREE (SYMBOL VARIES WITH TREE TYPE)	FM	DENOTES F

CALL BEFORE YOU DIG...
1-800-432-4770
UTILITIES PROTECTION CENTER
IT'S THE LAW

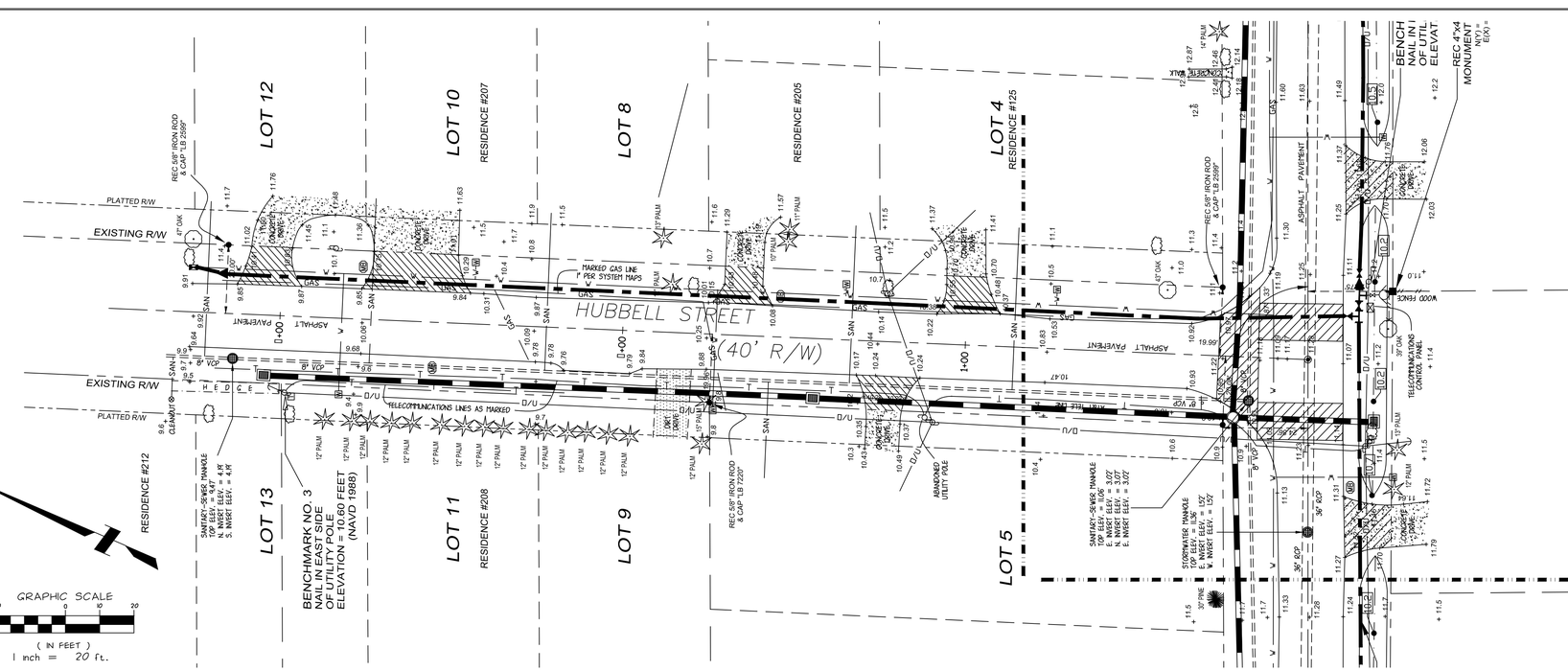

TYPE	SURVEY DATE	WORK ORDER #	P.C.	CALC.	DRAFT	CHECKED
TOPOGRAPHICAL SURVEY	06/9/2015	S-25-204	C.R.R.	J.W.C.	MC/BTC	J.W.C.

TYPE	DATE	WORK ORDER #	---	CALC.	DRAFT	CHECKED

LEGEND & ABBREVIATIONS

DENOTES 4" IRON ROD W/ CAP "QUENTIN L. HAMPTON" (U.N.O.)
DENOTES MONUMENT FOUND (U.N.O.)
DENOTES MONUMENT SET (U.N.O.)
DENOTES CONCRETE MONUMENT FOUND (U.N.O.)
DENOTES CONCRETE MONUMENT SET (U.N.O.)
DENOTES NAIL FOUND (U.N.O.)
DENOTES NAIL SET (U.N.O.)
DENOTES ELECTRICAL METAL TUBING FOUND
DENOTES ELECTRICAL METAL TUBING SET
BENCHMARK COORDINATE VALUE
EXISTING COORDINATE VALUE (U.N.O.)
P.S.M. PROFESSIONAL SURVEYOR AND MAPPER
F.E.L. FINISHED FLOOR ELEVATION
N.A.V.D. NORTH AMERICAN VERTICAL DATUM (1988)
S.W.C.C. STORMWATER CONTROL CONCRETE
S.E.C.C. EROSION CONTROL CONCRETE
U.S.C.G.S. U.S. UNITED STATES COAST - GEODETIC SURVEY
P.R.M. PERMANENT REFERENCE MONUMENT
P.C.P. PERMANENT CONTROL POINT
F.I.P. FOUND IRON PIPE
F.I.R. FOUND IRON ROD
I.P. IRON PIPE
I.R. IRON ROD
R/W RIGHT OF WAY
C.L. CENTER LINE
C.O. CLEAN OUT
U.E. UTILITY EASEMENT
D.E. DRAINAGE EASEMENT
C.B.S. CONCRETE BLOCK STRUCTURE
R/S REBAR SET
P.O.B. POINT OF BEGINNING
P.O.C. POINT OF COMMENCEMENT
W.M. WATER METER
T.M. TELECOMMUNICATIONS (TELE) MARKER
P.I. POINT OF INTERSECTION
R/P REINFORCED CONCRETE PIPE
C.M.P. CORRUGATED METAL PIPE
C.P.P. CORRUGATED PLASTIC PIPE
E.O.B. EXISTING ELEVATION (ELEV.)
CONCRETE (CONC)
CONCRETE BOTTOM

CERTIFICATE OF AUTHORIZATION NUMBER LB 7883

I hereby certify that this survey and report of the property described herein was made under my supervision and that it meets the Standards of Practice set forth by the Florida Board of Professional Surveyors and Mappers, pursuant to Florida Statute 472.027, and Florida Administrative Code 5J-17, and that it is true and correct to the best of my knowledge and belief.

DANIEL W. CORY P.S.M. NO. 2020
JEFFREY W. CORY P.S.M. NO. 4152

THIS PROPERTY IS LOCATED IN F.I.R.M. ZONE(S): N/A
THIS LOCATION IS DETERMINED FROM F.I.R.M. COMMUNITY PANEL MAP REVISED

DANIEL W. CORY
SURVEYOR, LLC
350 CANAL STREET
NEW SMYRNA BEACH, FLORIDA 32168
(386) 427-5615
FAX (386) 427-1783
web site: corysurveyor.com

PREPARED FOR: QUENTIN L. HAMPTON ASSOC., INC.
SCALE 1" = 20' FILE # 3045
"LAMONT STREET" & "HUBBELL STREET"

SHEET 1 of 2

No.	BY	REVISIONS	DATE	No.	BY	REVISIONS	DATE

QUENTIN L. HAMPTON ASSOCIATES, INC.
CONSULTING ENGINEERS
FLORIDA CERTIFICATE-of-AUTHORIZATION No. 626
PHONE: (386) 761-6810 FAX: (386) 761-3977

CITY of
EDGEWATER
VOLUSIA COUNTY, FLORIDA

LAMONT AND HUBBELL STREET STORMWATER IMPROVEMENTS

PROJECT No. EW111

SURVEY
SHEET 1 OF 2

DRAWN BY: MS

ANDREW M. GIANNINI, P.E.
FLORIDA REGISTRATION #46601

SHEET No.
3
OF 14

CAD FILE: 505006

S:\EW\EW111 Lamont & Hubbell Area Stormwater Improvements\Production\Design\EW111 100% Plans.dwg, 12/14/2016 11:40:21 AM, DWG To PDF.pc3

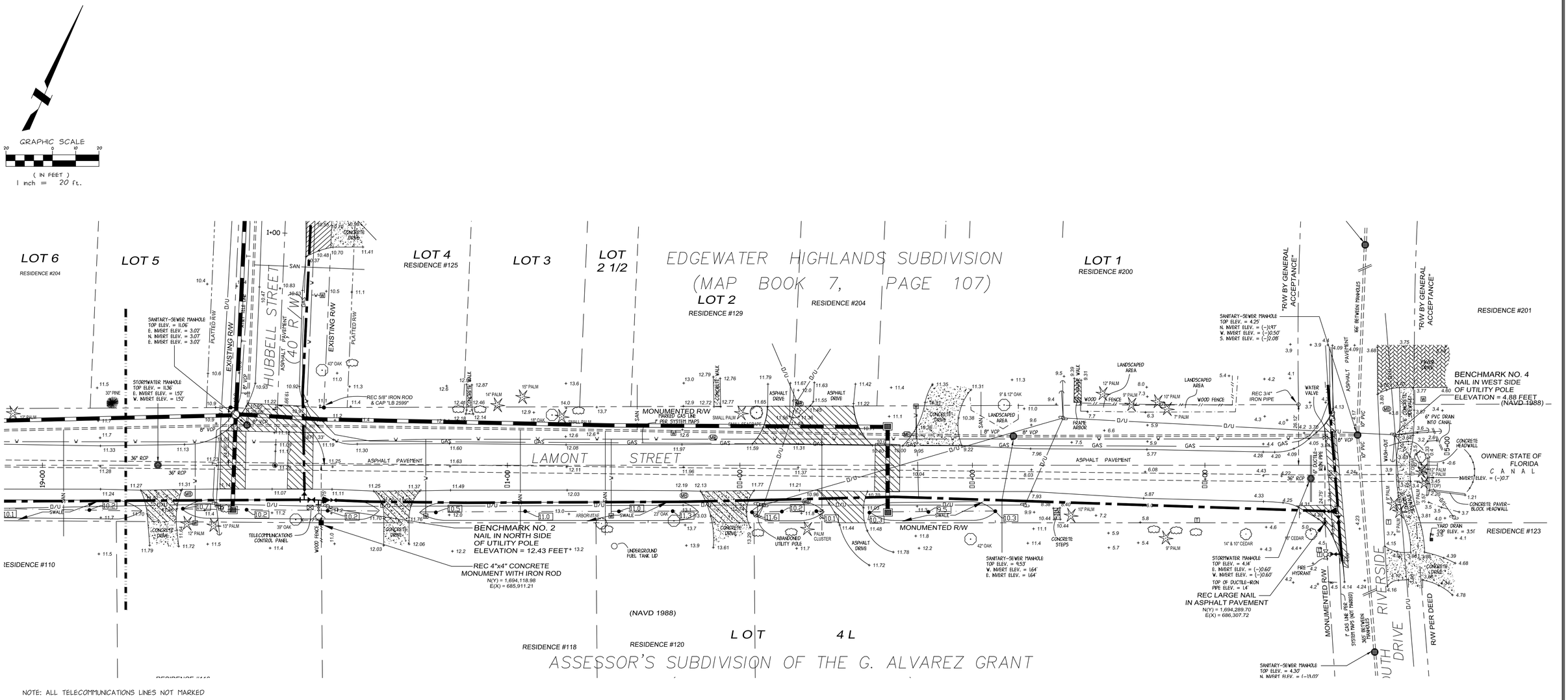

NOTE: ALL TELECOMMUNICATIONS LINES NOT MARKED

BURIED UTILITIES NOTE

BURIED UTILITIES ARE SHOWN AT THEIR APPROXIMATE LOCATION BASED UPON INFORMATION OBTAINED FROM UTILITY COMPANIES AND FIELD EVIDENCE. OTHER BURIED UTILITIES MIGHT EXIST ON THE SUBJECT SITE WHICH ARE NOT SHOWN ON THIS DRAWING. USE EXTREME CAUTION DURING EXCAVATION PROCEDURES AND CONTACT SUNSHINE STATEONE. @ 1-800-432-4770 FOR EXACT LOCATION OF BURIED FACILITIES PRIOR TO EXCAVATION OPERATIONS.

CALL BEFORE YOU DIG...
1-800-432-4770
UTILITIES PROTECTION CENTER
IT'S THE LAW

LEGEND & ABBREVIATIONS FOR TOPOGRAPHIC FEATURES INTENDED TO BE SURVEYED AND MAPPED

- (MB) : DENOTES MAILBOX
- : DENOTES SPRINKLER (ALL SPRINKLERS NOT LOCATED)
- VCP : DENOTES VITREOUS CLAY PIPE
- : DENOTES SIGN
- W — W — : DENOTES WATER SERVICE FROM METER
- — SAN — : DENOTES SANITARY-SEWER SERVICE
- : DENOTES TREE (SYMBOL VARIES WITH TREE TYPE)
- : DENOTES SHRUB
- : DENOTES LANDSCAPED AREA or AREA OF BUSHES : SHRUBBERY
- + 8.0 : DENOTES SPOT ELEVATION
- : DENOTES UTILITY POLE
- : DENOTES GUY ANCHOR
- — O/U — : DENOTES OVERHEAD UTILITIES
- (T) : DENOTES TELECOMMUNICATIONS RISER
- (W) : DENOTES WATER METER
- (C) : DENOTES CABLE TELEVISION RISER
- — F.M. — : DENOTES FORCE MAIN
- — U/E — : DENOTES UNDERGROUND ELECTRIC
- (WV) : DENOTES WATER VALVE (UNLESS OTHERWISE NOTED)

TYPE
TOPOGRAPHIC SURVEY

TYPE

	SURVEY DATE	WORK ORDER #	P.C.	CALC.	DRAFT	CHECKED
	06/16/2015	15-05-006	C.R.H.	J.W.C.	JWC/BTC	J.W.C.
	DATE	WORK ORDER #	---	CALC.	DRAFT	CHECKED

LEGEND & ABBREVIATIONS

- ● : DENOTES 8" IRON ROD W/ CAP " CORY LB 7883 " UNLESS OTHERWISE NOTED
- ○ : DENOTES IRON PIPE UNLESS OTHERWISE NOTED
- □ : DENOTES CONCRETE MONUMENT UNLESS OTHERWISE NOTED
- EMT : ELECTRICAL METAL TUBING
- FND : FOUND
- REC : RECOVERED
- N(Y) : NORTHING COORDINATE VALUE
- E(X) : EASTING COORDINATE VALUE
- LB : LICENSED BUSINESS
- P.S.M. : PROFESSIONAL SURVEYOR AND MAPPER
- F.I.R.M. : FLOOD INSURANCE RATE MAP
- N.A.V.D. : NORTH AMERICAN VERTICAL DATUM (1988)
- N.G.V.D. : NATIONAL GEODETIC VERTICAL DATUM (1929)
- C.C.C.L. : COASTAL CONSTRUCTION CONTROL LINE
- U.S.C. : G.S. : UNITED STATES COAST : GEODETIC SURVEY
- △ R : DELTA / RADIUS OR RANGE
- L : ARC LENGTH
- C : CHORD
- CB : CHORD BEARING
- T : TANGENT OR TOWNSHIP
- (R) : RADIAL
- (NR) : NON-RADIAL
- (NT) : NON-TANGENT
- PC : POINT OF CURVATURE OR PARTY CHIEF
- PT : POINT OF TANGENCY
- (P) : PLAT
- (D) : DESCRIPTION
- (M) : MEASURED
- (C) : CALCULATED (CALC)
- (PR) : PRORATED
- (G) : GRID
- O.R. : OFFICIAL RECORD BOOK
- M.B. : MAP BOOK
- P.O.B. : POINT OF BEGINNING
- P.O.C. : POINT OF COMMENCEMENT
- (W) : WATER METER
- (T) : TELECOMMUNICATIONS (TELE) RISER
- F.F. : FINISHED FLOOR ELEVATION
- RCP : REINFORCED CONCRETE PIPE
- CMP : CORRUGATED METAL PIPE
- CPP : CORRUGATED PLASTIC PIPE
- + 0.0 : EXISTING ELEVATION (ELEV)
- P.R.M. : PERMANENT REFERENCE MONUMENT
- P.C.P. : PERMANENT CONTROL POINT
- : POWER POLE
- : GUY WIRE
- O U : OVERHEAD UTILITIES
- A C : AIR CONDITIONER
- CLF : CHAIN-LINK FENCE
- BWF : BARBED WIRE FENCE
- AC. : ACRES
- R.W : RIGHT-OF-WAY
- ℄ : CENTER LINE
- (CONC) : CONCRETE (CONC)
- (S) : CONCRETE STOOP

CERTIFICATE OF AUTHORIZATION NUMBER LB 7883

THE SURVEY MAP AND REPORT OR COPIES THEREOF ARE NOT VALID WITHOUT THE SIGNATURE AND THE ORIGINAL RAISED SEAL OF A FLORIDA LICENSED SURVEYOR AND MAPPER, WHICH CAN BE FOUND ON SHEET 1.

THIS PLAT OF TOPOGRAPHIC SURVEY CONTAINS 2 SHEETS. EACH SHEET IS NOT FULL AND COMPLETE WITHOUT THE OTHER SHEET OF THE SET.

THIS PROPERTY IS LOCATED IN F.I.R.M. ZONE(S) N/A

THIS LOCATION IS DETERMINED FROM F.I.R.M. COMMUNITY PANEL MAP REVISED

DANIEL W. CORY
SURVEYOR, LLC
300 CANAL STREET
NEW SMYRNA BEACH, FLORIDA 32168
(386) 427-9575
FAX (386) 427-1783
web site: corysurveyor.com

PREPARED FOR: QUENTIN L. HAMPTON ASSOC., INC.

SCALE 1" = 20' | FILE # 3045

SHEET 2 of 2

No.	BY	REVISIONS	DATE	No.	BY	REVISIONS	DATE

QUENTIN L. HAMPTON ASSOCIATES, INC.
CONSULTING ENGINEERS
FLORIDA CERTIFICATE-of-AUTHORIZATION No. 626
PHONE: (386) 761-6810 FAX: (386) 761-3977

CITY of EDGEWATER
VOLUSIA COUNTY, FLORIDA

LAMONT AND HUBBELL STREET STORMWATER IMPROVEMENTS
PROJECT No. EW111

SURVEY
SHEET 2 OF 2
DRAWN BY: MS

ANDREW M. GIANNINI, P.E.
FLORIDA REGISTRATION #46601

SHEET No. 4 OF 14

CAD FILE: I505006

S:\EW\EW111 Lamont & Hubbell Area Stormwater Improvements\Production\Design\EW111 100% Plans.dwg, 12/14/2016 11:40:39 AM, DWG To PDF.pc3

GENERAL NOTE:
SILT FENCE SHALL BE CONSTRUCTED AS NEEDED TO PREVENT SILTATION DISCHARGE WHERE TOPOGRAPHY WILL ALLOW. CONTRACTOR SHALL CONSULT WITH ENGINEER AS NEEDED.

(S-11) CONSTRUCT M.H. 5'x3' TYPE 'J' W/ ALT. 'B' TOP TOP EL.= 9.00 N. INV. = 7.0 S. INV. = 7.0 W. INV. = 2.80 E. INV. = 2.75 BOTTOM = 2.70

(S-2) CONSTRUCT TYPE "E" INLET W/ SUMP TOP EL.= 8.70 E. INV. = 5.50 S. INV. = 6.00 1 FT BOTTOM W/ 18" HOLE

CONTRACTOR TO ARRANGE UTILITY POLE TO BE HELD BY UTILITY COMPANY AT NO ADDITIONAL COST

PROPOSED ±550 LF 6" C900 PVC WATER MAIN

PROPOSED (2) 2" SCH 80 PVC CHASES FOR FUTURE SAMPLER. IN SOD AREA, 4 FT FROM R/W, INSTALL SWEET 90 AND TURN UP TO 6" ABOVE FINISH GRADE, PROVIDE CLEANOUT CAP.

ADJUST SANITARY SEWER LATERAL AS REQUIRED (TYPICAL)

CAP AND ABANDON EXISTING 2" WM

USE CAUTION WHEN EXCAVATING AT VCP CROSSING

PROPOSED ±210 LF 18" HDPE EXFILTRATION TRENCH

(S-3) CONSTRUCT TYPE "E" INLET W/SUMP TOP EL.= 10.60 W. INV. = 5.50 E. INV. = 5.50 1 FT BOTTOM W/ 18" HOLE

PROPOSED ±155 LF 18" HDPE EXFILTRATION TRENCH

LIMIT OF 1" S-III ASPHALT OVERLAY. MILL EDGE TO MATCH EXISTING GRADE

OPEN CUT AND REPAIR CONCRETE (TYPICAL)

RELOCATE AND RECONNECT EXISTING FIRE HYDRANT TO PROPOSED LOCATION

TIE INTO EXISTING 8" WATER MAIN FITTINGS: 8"x6" TAPPING SLEEVE & VALVE

BENCHMARK NO. 1
"X"CUT IN CONCRETE OF MANHOLE STRUCTURE
ELEVATION = 10.48 FEET
(NAVD 1988)

PROPOSED ±4 LF 36" RCP

DEFLECT WATER MAIN UNDER STORM PIPE FITTINGS: (4) 6" 45° BENDS

OPEN CUT & REPAIR ASPHALT (TYPICAL)

PROPOSED ±30 LF 12X18" RCP

(S-1) CONSTRUCT TYPE "E" INLET W/ SUMP TOP EL.= 8.00 N. INV. = 6.00 1FT BOTTOM W/ 18" HOLE

(S-8) PROPOSED BAFFLE BOX SEE DETAIL SHEET No. 6 TOP EL. = 9.00 W. INV. = 2.70 E. INV. = 2.65 BOTTOM = (-) 2.20

PROPOSED SODDED SWALES (TYP) SEE DETAIL SHEET No. 10

REPLACE ALL WATER SERVICES WITH 1" POLY WATER SERVICE (TYPICAL)

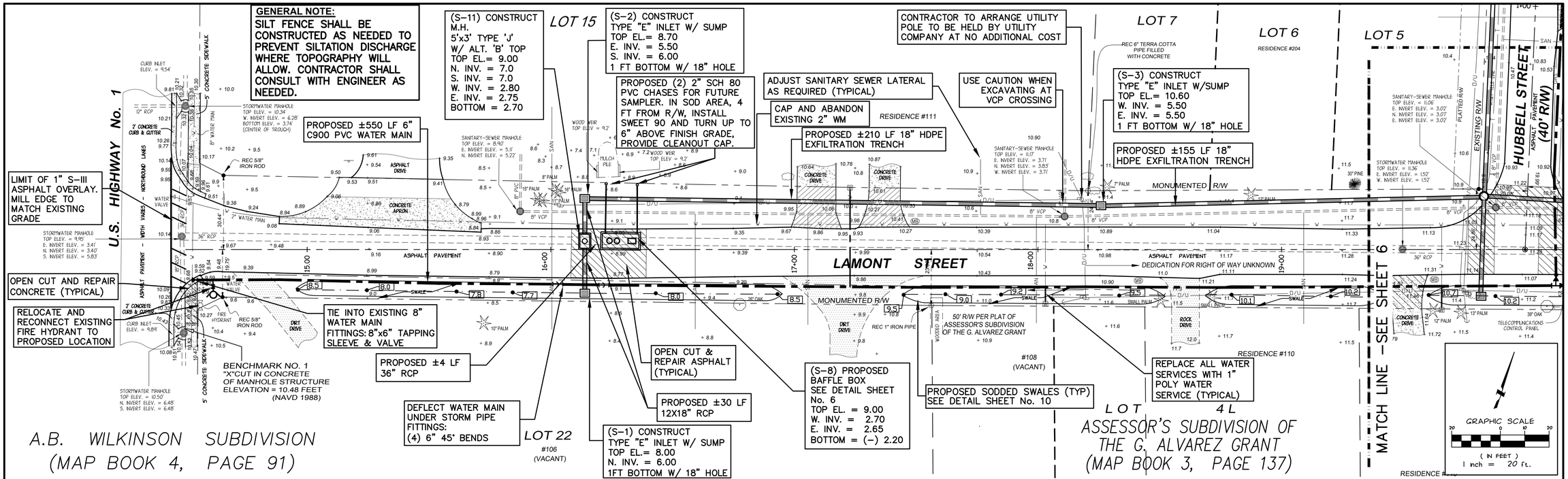

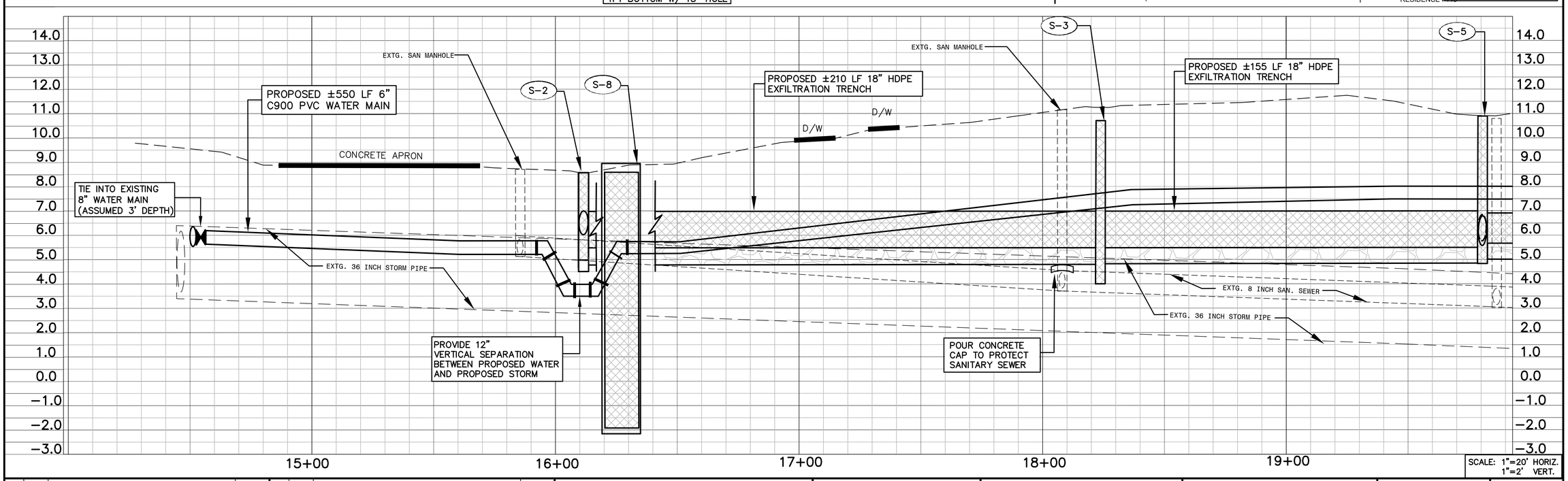

SCALE: 1"=20' HORIZ. 1"=2' VERT.

No.	BY	REVISIONS	DATE	No.	BY	REVISIONS	DATE

QUENTIN L. HAMPTON ASSOCIATES, INC.
CONSULTING ENGINEERS
FLORIDA CERTIFICATE-of-AUTHORIZATION No. 626
PHONE: (386) 761-6810 FAX: (386) 761-3977

CITY of EDGEWATER
VOLUSIA COUNTY, FLORIDA

LAMONT AND HUBBELL STREET STORMWATER IMPROVEMENTS
PROJECT No. EW111

PROPOSED LAMONT STREET WEST
DRAWN BY: MS

ANDREW M. GIANNINI, P.E.
FLORIDA REGISTRATION #46601

SHEET No. 5 OF 14

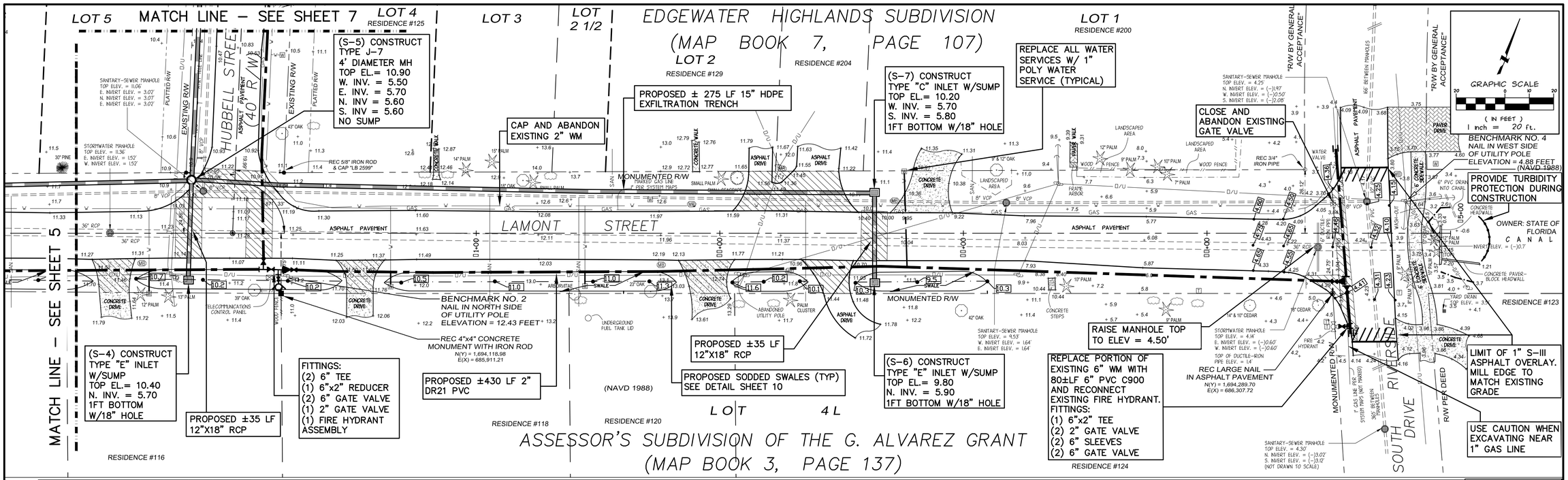

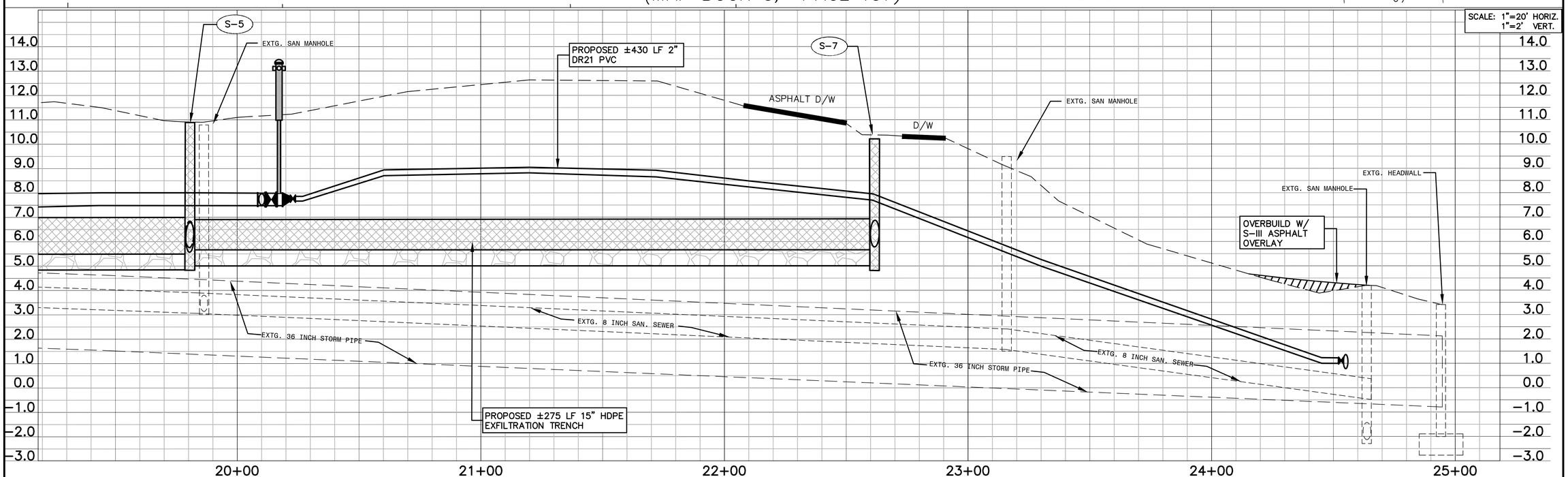

No.	BY	REVISIONS	DATE	No.	BY	REVISIONS	DATE

QUENTIN L. HAMPTON ASSOCIATES, INC.
CONSULTING ENGINEERS
FLORIDA CERTIFICATE-of-AUTHORIZATION No. 626
PHONE: (386) 761-6810 FAX: (386) 761-3977

CITY of EDGEWATER
VOLUSIA COUNTY, FLORIDA

LAMONT AND HUBBELL STREET STORMWATER IMPROVEMENTS

PROJECT No. EW111

PROPOSED LAMONT STREET EAST

DRAWN BY: MS

ANDREW M. GIANNINI, P.E.
FLORIDA REGISTRATION #46601

SHEET No. 6 OF 14

S:\EW\EW111 Lamont & Hubbell Ave Stormwater Improvements\Production\Design\EW111 100% Plans.dwg 12/14/2016 11:42:13 AM; DWG To PDF.pc3

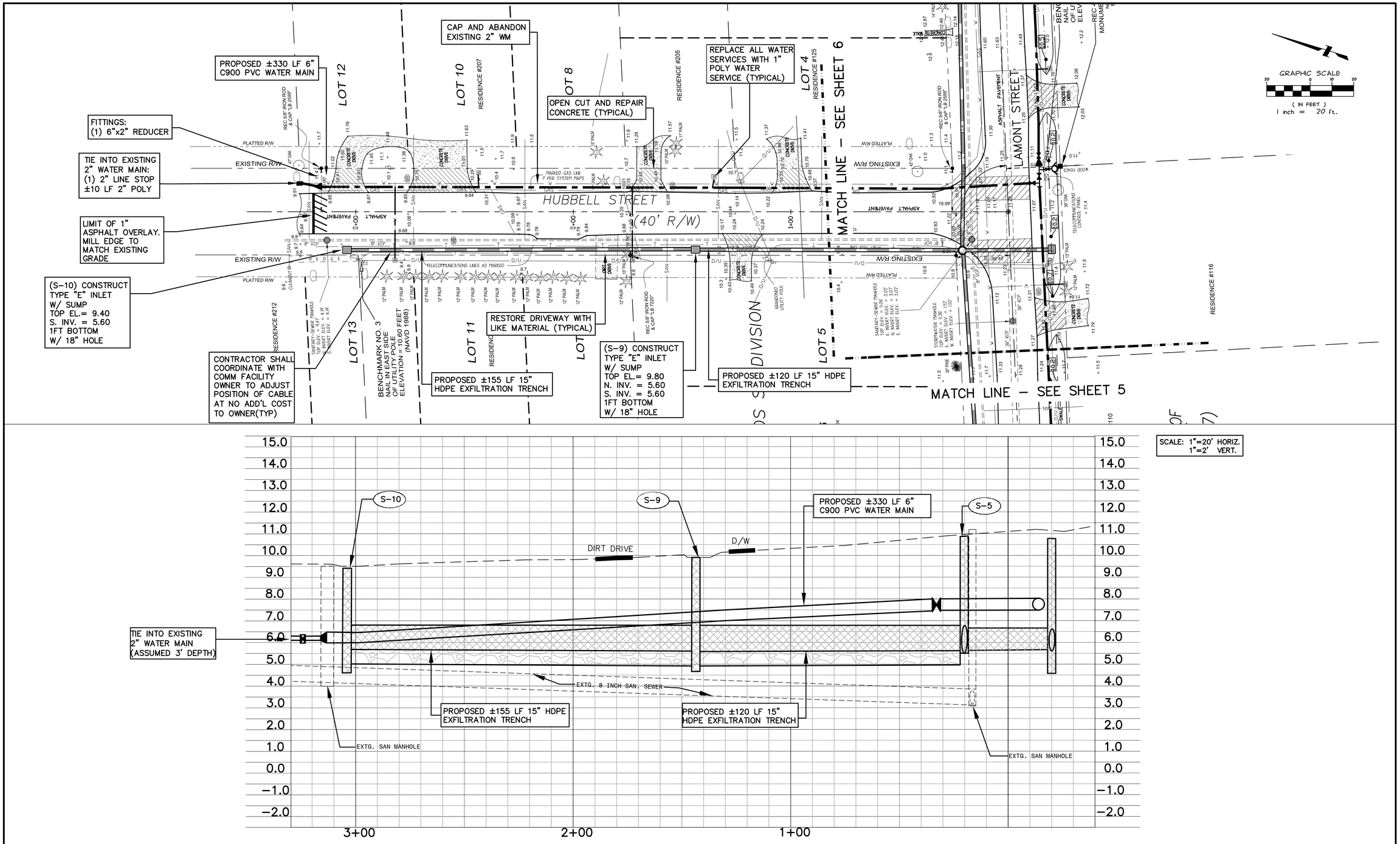

No.	BY	REVISIONS	DATE	No.	BY	REVISIONS	DATE

QUENTIN L. HAMPTON ASSOCIATES, INC.
CONSULTING ENGINEERS
FLORIDA CERTIFICATE-of-AUTHORIZATION No. 626
PHONE: (386) 761-6810 FAX: (386) 761-3977

CITY of
EDGEWATER
VOLUSIA COUNTY, FLORIDA

LAMONT AND HUBBELL STREET STORMWATER IMPROVEMENTS

PROJECT No. EW111

PROPOSED HUBBELL STREET

DRAWN BY: MS

ANDREW M. GIANNINI, P.E.
FLORIDA REGISTRATION #46601

SHEET No.
7
OF 14

SUNTREE TECHNOLOGIES INC.™ NUTRIENT SEPARATING BAFFLE BOX™ MODEL NO: NSBB-6-15

FLOW & BY-PASS SPECIFICATIONS FOR BIOMASS SEPARATING SCREEN SYSTEM, SEDIMENT COLLECTION CHAMBERS, AND SKIMMER SPECIFICATIONS

1. Pipe inflow area (Drawn as 36" RCP) — 7.07 sq.ft.

SCREEN SPECIFICATIONS:
2. Open orifice area in screen system — 45.18 sq.ft.
3. Open orifice area in screen system with 50% blockage — 22.59 sq.ft.
4. Open orifice area in screen system with 75% blockage — 11.29 sq.ft.
5. Minimum by-pass through screen system below the top surface of the pipe — 4.50 sq.ft.
6. Minimum by-pass around screen system below the top surface of the pipe — 5.20 sq.ft.
7. Screen system storage volume — 49.40 cu.ft.

SEDIMENT STORAGE:
8. Volume of first sediment chamber — 92.00 cu.ft.
9. Volume of second sediment chamber — 92.00 cu.ft.
10. Volume of third sediment chamber — 76.00 cu.ft.
11. Total sediment volume — 260.00 cu.ft.

SKIMMER SPECIFICATIONS:
12. Flow area under skimmer — 9.71 sq.ft.
13. Area of pipe in line with skimmer — 3.14 sq.ft.
14. Area between the skimmer and the outflow pipe parallel with the surface of the pipe — 10.99 sq.ft.

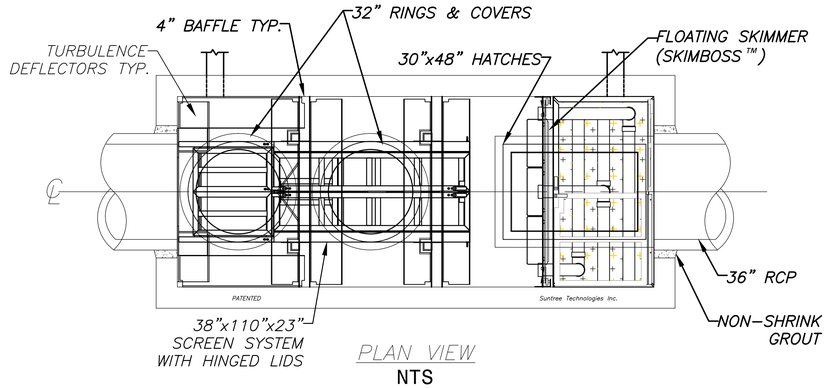

PLAN VIEW
NTS

PATENTED
AND PATENTS PEND.

INSTALLATION NOTES:

1. INFLOW AND OUTFLOW PIPES ARE TO BE FLUSH WITH THE INSIDE SURFACE OF THE CONCRETE STRUCTURE. (CAN NOT INTRUDE BEYOND FLUSH)
2. INVERT OF OUTFLOW PIPE SHOULD BE EVEN WITH THE TOP OF THE BAFFLES.
3. BAFFLES SHOULD BE SEALED WITH GROUT.
4. THE BOTTOM OF THE SKIMMER SHOULD BE 6" BELOW THE INVERT OF THE OUTFLOW PIPE.
5. INVERT OF THE INFLOW PIPE SHOULD NOT BE BELOW THE INVERT OF THE OUTFLOW PIPE.

Suntree Technologies Inc.
798 Clearlake Road, Cocoa, Florida 32922
PH: 321-637-7552 Fax: 321-637-7554

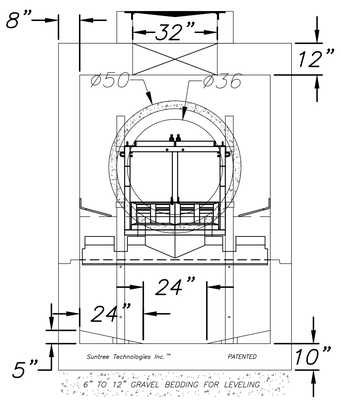

LEFT END VIEW

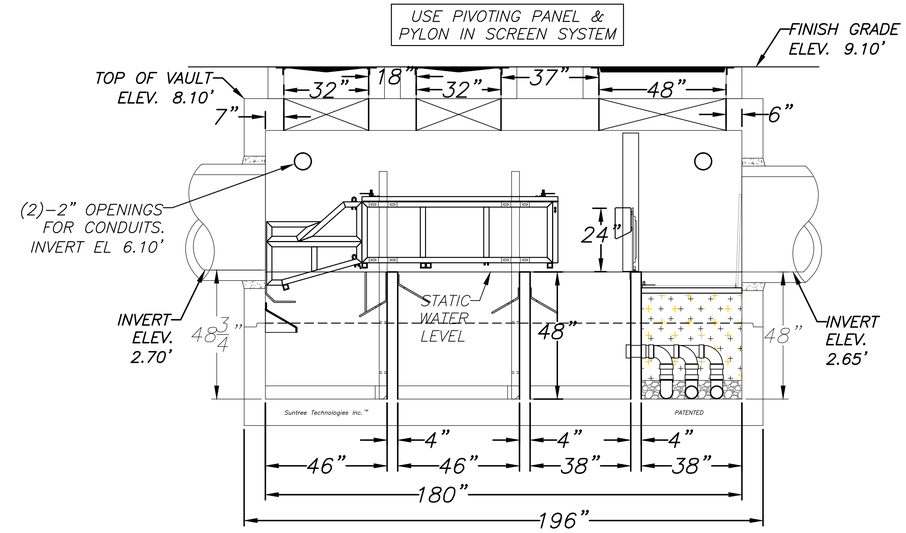

FRONT SIDE VIEW
NTS

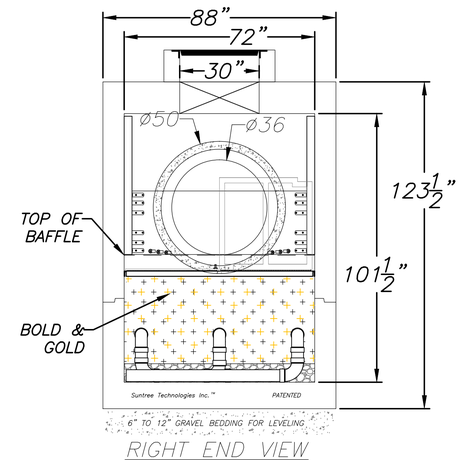

RIGHT END VIEW

NOTES:
1. CONCRETE 28 DAY COMPRESSIVE STRENGTH FC=5000 PSI
2. REINFORCING: ASTM A-615 GRADE 60
3. SUPPORTS AN H20 LOADING AS INDICATED BY AASHTO.
4. JOINT SEALANT: BUTYL RUBBER SS-S-00210
5. ALL WALLS TO BE 8" THICK, BOTTOM TO BE 10" THICK, AND TOP TO BE 12" THICK.
6. TREATMENT DESIGN FLOW FOR 80% REMOVAL EFFICIENCY OF TSS IS 24 CFS.
7. BOLD & GOLD MEDIA FILTRATION.
8. BAFFLES ARE TO BE SEALED WITH GROUT TO FORM 4 WATER TIGHT CHAMBERS.

NOTE: BAFFLE BOX TO BE AS MANUFACTURED BY SUNTREE TECHNOLOGIES OR AN OWNER APPROVED EQUAL.

SUNTREE TECHNOLOGIES INC.™ 798 CLEARLAKE RD. SUITE #2 COCOA, FL. 32922		PROJECT: LAMONT & HUBBELL STREET	CAD	REVISIONS	DATE
NUTRIENT SEPARATING BAFFLE BOX™ MODEL NO: NSBB-6-15					
DRAFTER: S.H.3.	SCALE: N/A	03-09-~~21~~-15-04			
CHECKED BY: A.B.1.	UNITS: INCHES	FILE NAME: NSBB-6-15			
START DATE: 01/26/16	ISSUE TO: *SHOP*				

Suntree Technologies, Inc. owns the copyright in and to this drawing. The drawing contains Suntree's proprietary, confidential, and privileged information. Any unauthorized review, use, disclosure, or distribution is prohibited.

No.	BY	REVISIONS	DATE	No.	BY	REVISIONS	DATE

QUENTIN L. HAMPTON ASSOCIATES, INC.
CONSULTING ENGINEERS
FLORIDA CERTIFICATE-of-AUTHORIZATION No. 626
PHONE: (386) 761-6810 FAX: (386) 761-3977

CITY of EDGEWATER
VOLUSIA COUNTY, FLORIDA

LAMONT AND HUBBELL STREET STORMWATER IMPROVEMENTS

PROJECT No. EW111

BAFFLE BOX DETAILS

DRAWN BY: MS

ANDREW M. GIANNINI, P.E.
FLORIDA REGISTRATION #46601

SHEET No. 8 OF 14

S:\EW\EW111 Lamont & Hubbell Area Stormwater Improvements\Production\Design\EW111 100% Plans.dwg 12/14/2016 12:23:10 PM, DWG To PDF.pc3

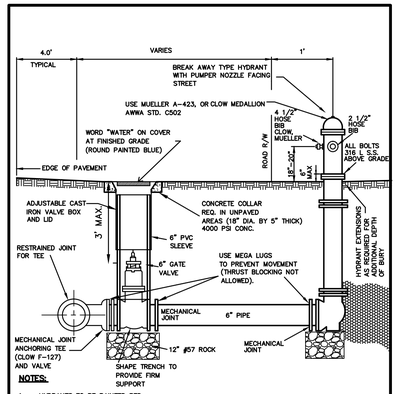

NOTES:

1. HYDRANTS TO BE PAINTED RED.
2. HOSE BIBS TO BE AMERICAN STANDARD THREADS. (FIRE THREAD)
3. RESTRAINED JOINTS REQUIRED. THRUST BLOCKS ARE NOT PERMITTED.
4. ADJUSTABLE TRENCH ADAPTOR ASSY. REQUIRED FOR ALL VALVES GREATER THAN 3' DEEP.
5. INSTALL AT SIDE LOT LINES OR AT CORNERS OF ROADWAY INTERSECTIONS, (TYPICAL).
6. BLUE REFLECTORS TO BE PLACED IN MIDDLE OF TRAVEL LANE ON SIDE OF ROAD THE HYDRANT IS ON.

EDGEWATER

STANDARD CONSTRUCTION DETAIL
FIRE HYDRANT ASSEMBLY

FILE NAME: EW_W1.DWG
DETAIL REF: **W–1**

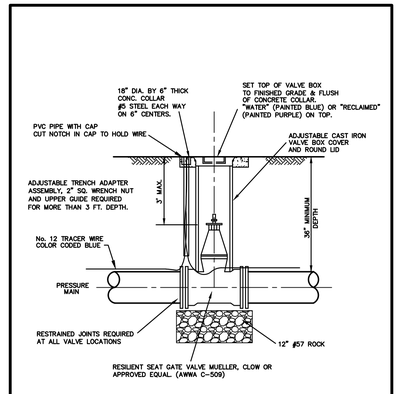

NOTE:

1. ROD OR BOLT TEE WHERE APPLICABLE.
2. VALVE BOX EXTENSIONS SHALL BE ONE CONTINUOUS PIECE OF PIPE.

EDGEWATER

STANDARD CONSTRUCTION DETAIL
POTABLE WATER AND/OR RECLAIMED WATER VALVE AND VALVE BOX (2" – 16" VALVE SIZES)

FILE NAME: EW_W2.DWG
DETAIL REF: **W–2**

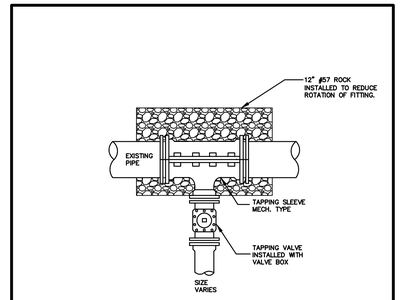

NOTES:

1. TAPPING SLEEVES SHALL BE ALL STAINLESS STEEL i.e. ROMAC INDUSTRIES, INC. MODEL SST.
2. INSTALL REQUIRED RESTRAINED JOINTS. IN NO INSTANCE SHALL THRUST BLOCK BE PERMITTED.
3. ALL TAPPING OF MAINS SHALL BE SUPERVISED BY THE CITY 48 HRS ADVANCE NOTICE PROVIDED.
4. TAPPING ASSEMBLY TO BE TESTED AT 150 p.s.i. FOR 10 MINUTES PRIOR TO PERFORMING TAP.

EDGEWATER

STANDARD CONSTRUCTION DETAIL
TAPPING VALVE AND SLEEVE

FILE NAME: EW_W3.DWG
DETAIL REF: **W–3**

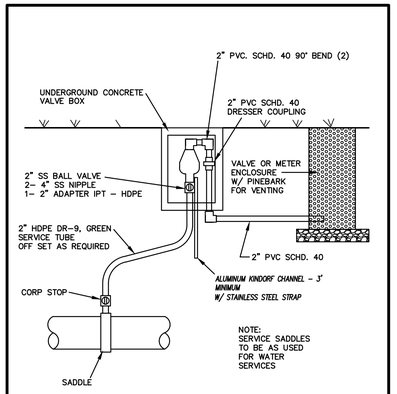

NOTE:
SERVICE SADDLES TO BE AS USED FOR WATER SERVICES

EDGEWATER

STANDARD CONSTRUCTION DETAIL
AIR / VACUUM RELEASE VALVE PIT

FILE NAME: EW_W4.DWG
DETAIL REF: **W–4**

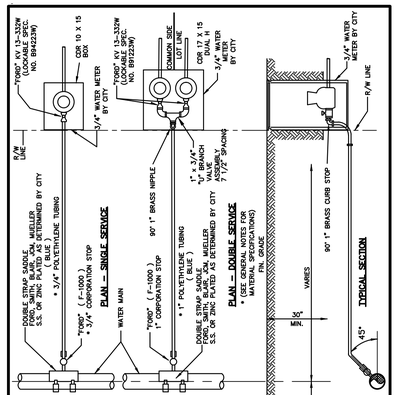

EDGEWATER

STANDARD CONSTRUCTION DETAIL
WATER LATERAL SERVICE (3/4" – 2" SIZES)

FILE NAME: EW_W5.DWG
DETAIL REF: **W–5**

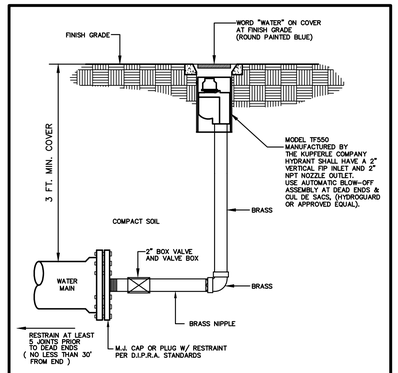

NOTES:

1. NO GALVANIZED FITTINGS PERMITTED.

EDGEWATER

STANDARD CONSTRUCTION DETAIL
POTABLE WATER BLOW-OFF ASSEMBLY

FILE NAME: EW_W6.DWG
DETAIL REF: **W–6**

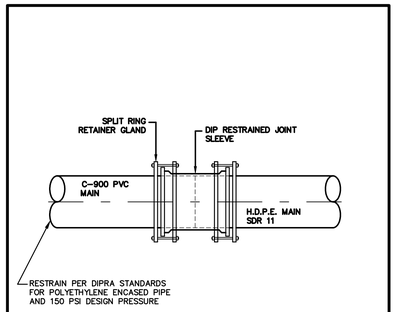

EDGEWATER

STANDARD CONSTRUCTION DETAIL
P.V.C. TO H.D.P.E. RESTRAINED JOINT DETAIL

FILE NAME: EW_W7.DWG
DETAIL REF: **W–7**

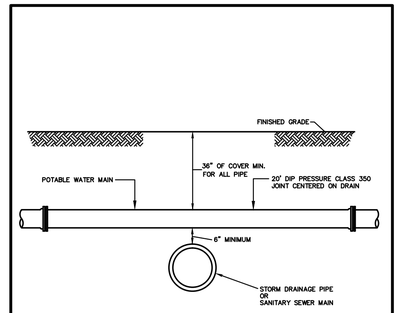

NOTE:

1. CONCRETE ENCASEMENT OF A SANITARY SEWER MAIN IS AN ALTERNATIVE METHOD OF ADDRESSING A CONFLICT WHEN 18" VERTICAL SEPARATION DISTANCE CANNOT BE MAINTAINED. IN SUCH INSTANCES, THE MINIMUM PIPE VERTICAL SEPARATION SHALL BE 6".

EDGEWATER

STANDARD CONSTRUCTION DETAIL
STORM DRAINAGE PIPE OR SANITARY SEWER MAIN CONFLICT

FILE NAME: EW_W14.DWG
DETAIL REF: **W–14**

CONCRETE ENCASEMENT OF SANITARY SEWER IS AN ALTERNATIVE METHOD OF ADDRESSING A CONFLICT WHEN UNABLE TO MAINTAIN 18" VERTICAL SEPARATION DISTANCE. IN SUCH INSTANCES, THE MINIMUM PIPE VERTICAL SEPARATION SHALL BE 6".

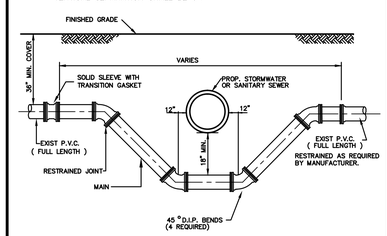

NOTES:

1. LOWERING OF EXISTING WATER MAIN & FORCE MAIN BY DEFLECTION METHOD ACCEPTABLE IF EXISTING FIELD CONDITIONS PERMIT.
2. LENGTH OF SECTION BASED ON MINIMUM LENGTH AS DETERMINED BY DIPRA RESTRAINED JOINT MANUAL.
3. INSTALL RESTRAINED JOINTS, AS REQUIRED, FROM DEFLECTION POINT IN BOTH DIRECTIONS.

EDGEWATER

STANDARD CONSTRUCTION DETAIL
STORM DRAINAGE PIPE OR SANITARY SEWER MAIN CONFLICT

FILE NAME: EW_W15.DWG
DETAIL REF: **W–15**

No.	BY	REVISIONS	DATE	No.	BY	REVISIONS	DATE

QUENTIN L. HAMPTON ASSOCIATES, INC.
CONSULTING ENGINEERS
FLORIDA CERTIFICATE–of–AUTHORIZATION No. 626
PHONE: (386) 761–6810 FAX: (386) 761–3977

CITY of
EDGEWATER
VOLUSIA COUNTY, FLORIDA

LAMONT AND HUBBELL STREET STORMWATER IMPROVEMENTS
PROJECT No. EW111

STANDARD DETAILS WATER
DRAWN BY: MS

ANDREW M. GIANNINI, P.E.
FLORIDA REGISTRATION #46601

S:\EW\EW111 Lamont & Hubbell Area Stormwater Improvements\Production\Design\EW111 100% Plans.dwg 12/24/2014 11:47:13 AM DWG to PDF.pc3

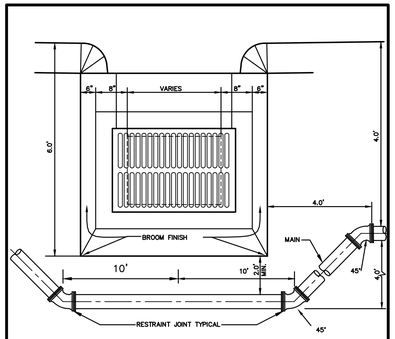

NOTES:

1. MAIN MAY PASS OVER STORM LINE IF 36" OF COVER IS PROVIDED OVER WATER MAIN OR RECLAIMED WATER LINE AND ADEQUATE CLEARANCE IS PROVIDED FROM THE STORM SEWER PIPE.
2. PIPE SHALL BE DEFLECTED AROUND DRAINAGE INLET IN ACCORDANCE WITH THE RESTRAINED JOINT GUIDELINES OF THE DIPRA AND ADAPTED TO PVC PIPE AS NECESSARY.

EDGEWATER

STANDARD CONSTRUCTION DETAIL
MAIN INSTALLATION BETWEEN
DRAINAGE INLET AND SIDEWALK

FILE NAME: EW_W16.DWG
DETAIL REF: W-16

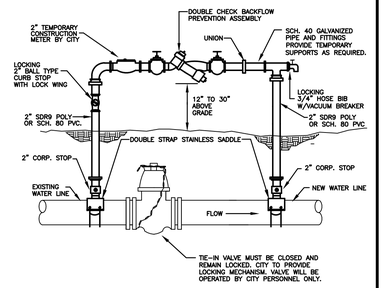

NOTES:

1. PROVIDE SUPPORT AND/OR PROTECTIVE MEASURES TO PREVENT ABOVE GROUND PIPE BEING BROKEN.

EDGEWATER

STANDARD CONSTRUCTION DETAIL
TEMPORARY JUMPER CONNECTION

FILE NAME: EW_W20.DWG
DETAIL REF: W-20

TECHNICAL SPECIFICATIONS FOR MECHANICAL JOINT DUCTILE IRON PIPE FITTINGS

ALL MECHANICAL JOINT DUCTILE IRON PIPE FITTINGS SHALL BE IN ACCORDANCE WITH ACCEPTABLE STANDARDS AND COMPLY WITH THE FOLLOWING SPECIFICATIONS:

MATERIAL:
A.S.T.M. A536 MINIMUM GRADE 70-50-5 IN ACCORDANCE WITH A.W.W.A. C153 (A.N.S.I. A21.53)

PRESSURE:
CLASS 350 IN ACCORDANCE WITH A.W.W.A. C153 (A.N.S.I. A21.53) 350 PSI WATER WORKING PRESSURE.

TESTING:
IN ACCORDANCE WITH A.W.W.A. C153 (ANSI A21.53). THREE TIMES WATER WORKING PRESSURE (350 PSI). BODY CAPABLE OF WITHSTANDING HYDROSTATIC TEST OF 1050 PSI.

FLOW:
I.D. EQUAL TO I.D. OF CLASS 50/51 DUCTILE IRON PIPE, THUS ALLOWING THE FULL FLOW FEATURE.

LAYING LENGTH:
SHORT BODY (COMPACT)

CEMENT LINING:
IN ACCORDANCE WITH A.W.W.A. C104 (A.N.S.I. A21.4)

MECHANICAL JOINTS:
IN ACCORDANCE WITH A.N.S.I./A.W.W.A. C111/A21.11

GASKETS:
SBR IN ACCORDANCE WITH A.W.W.A. C111 A.N.S.I. A21.11

TEE HEAD BOLTS:
COR-TEN IN ACCORDANCE WITH A.W.W.A. C111 (A.N.S.I. A21.11)

ACCEPTABLE MANUFACTURERS:
TYLER, CLOW, GRIFFIN, U.S. PIPE, UNION FOUNDRY, AMERICAN CAST IRON OR APPROVED EQUAL

EDGEWATER

STANDARD CONSTRUCTION DETAIL
TECHNICAL SPECIFICATIONS FOR
MECHANICAL JOINT
DUCTILE IRON PIPE FITTINGS

FILE NAME: EW_W25.DWG
DETAIL REF: W-25

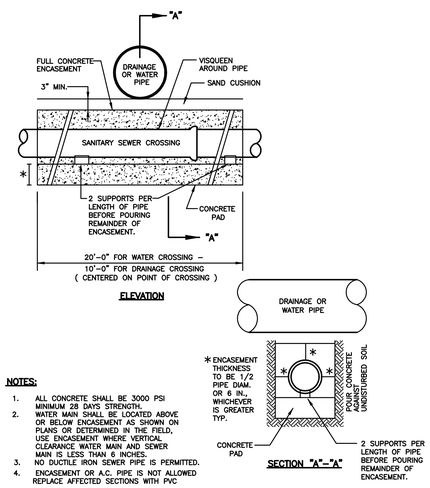

NOTES:

1. ALL CONCRETE SHALL BE 3000 PSI MINIMUM 28 DAYS STRENGTH.
2. WATER MAIN SHALL BE LOCATED ABOVE OR BELOW ENCASEMENT AS SHOWN ON PLANS OR DETERMINED IN THE FIELD. USE ENCASEMENT WHERE VERTICAL CLEARANCE WATER MAIN AND SEWER MAIN IS LESS THAN 6 INCHES.
3. NO DUCTILE IRON SEWER PIPE IS PERMITTED.
4. ENCASEMENT OR A.C. PIPE IS NOT ALLOWED REPLACE AFFECTED SECTIONS WITH PVC

SEWER CONDUIT CROSSING
NOT TO SCALE

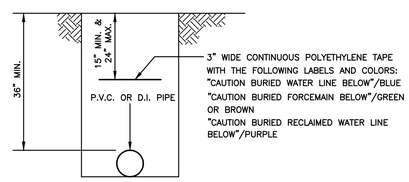

"TERRA TAPE D" or SIMILAR

LOCATOR TAPE INSTALLATION
NOT TO SCALE

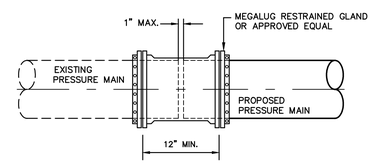

SLEEVE DETAIL
NOT TO SCALE

No.	BY	REVISIONS	DATE	No.	BY	REVISIONS	DATE

QUENTIN L. HAMPTON ASSOCIATES, INC.
CONSULTING ENGINEERS
FLORIDA CERTIFICATE-of-AUTHORIZATION No. 626
PHONE: (386) 761-6810 FAX: (386) 761-3977

CITY of
EDGEWATER
VOLUSIA COUNTY, FLORIDA

LAMONT AND HUBBELL STREET STORMWATER IMPROVEMENTS
PROJECT No. EW111

STANDARD DETAILS WATER
DRAWN BY: MS

ANDREW M. GIANNINI, P.E.
FLORIDA REGISTRATION #46601

SHEET No.
10
OF 14

E:\EW\EW111 Lamont & Hubbell Area Stormwater Improvements\Production\Design\EW111 100% Plans.dwg 12/24/2015 11:47:59 AM, DWG To PDF.pc3

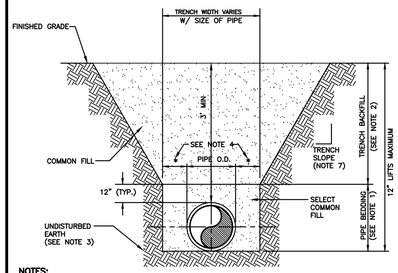

NOTES:

1. PIPE BEDDING: SELECT COMMON FILL COMPACTED TO 95% OF THE MAXIMUM DENSITY AS PER AASHTO T-180.
2. TRENCH BACKFILL: COMMON FILL COMPACTED TO 95% OF THE MAXIMUM DENSITY AS PER AASHTO T-180, (98% DENSITY REQUIRED UNDER DRIVEWAYS, PAVEMENT AND STRUCTURES).
3. PIPE BEDDING UTILIZING SELECT COMMON FILL OR BEDDING ROCK IN ACCORDANCE WITH TYPE "A" BEDDING AND TRENCHING DETAIL MAY BE REQUIRED AS DIRECTED BY THE CITY.
4. (*): 15" MAX. FOR PIPE DIAMETER LESS THAN 24", AND 24" MAX. FOR PIPE DIAMETER 24" AND LARGER.
5. WATER SHALL NOT BE PERMITTED IN THE TRENCH DURING CONSTRUCTION.
6. ALL PIPE TO BE INSTALLED WITH BELL FACING UPSTREAM TO THE DIRECTION OF FLOW.
7. REFER TO OSHA REQUIREMENTS FOR SLOPING, SHEETING AND BRACING IN EXCAVATIONS.
8. FINAL RESTORATION IN IMPROVED AREAS SHALL BE IN COMPLIANCE WITH ALL APPLICABLE REGULATIONS OF GOVERNING AGENCIES. SURFACE RESTORATION WITHIN RIGHT-OF-WAY SHALL COMPLY WITH REQUIREMENTS OF RIGHT-OF-WAY UTILIZATION REGULATIONS AND ROAD CONSTRUCTION SPECIFICATIONS.

EDGEWATER

TYPE "B" BEDDING AND TRENCH DETAIL (TYPICAL FOR WATER, SEWER, FORCE MAIN, STORM DRAIN AND RECLAIMED WATER MAIN INSTALLATIONS)

FILE NAME: EW_S29.DWG
DETAIL REF: S-29

REQUIREMENTS FOR AS-BUILT DRAWINGS

IN ORDER TO ENSURE THAT NEW SUBDIVISIONS AND SITE PLANS ARE CONSTRUCTED SUBSTANTIALLY IN ACCORDANCE WITH CITY REGULATIONS AND THE APPROVED DRAWINGS, THE FOLLOWING INFORMATION IS REQUIRED ON ALL SUBDIVISION AS-BUILT DRAWINGS.

1. PAVEMENT AND CURB WIDTHS SHALL BE VERIFIED AND DIMENSIONED FOR EACH STREET AT EACH BLOCK. (FOR SUBDIVISIONS) AND AS APPROPRIATE TO CONFIRM PAVING LIMITS (ON SITE PLANS).
2. ALL RADII AT INTERSECTIONS SHALL BE VERIFIED AND DIMENSIONED. THIS INFORMATION IS TO BE CLEARLY INDICATED ON THE AS-BUILT.
3. ROADWAY ELEVATIONS SHALL BE RECORDED AT ALL GRADE CHANGES, 100' INTERVALS ALONG ROADWAY, AND OTHER INTERVALS AS NEEDED ALONG ALL STREETS. STREET CENTERLINE AND CURB INVERT ELEVATIONS SHALL BE RECORDED AS NOTED. THE AS-BUILT CENTERLINE PROFILE OF ALL STREETS SHALL ALSO BE SHOWN ON THE PLAN AND PROFILE SO IT MAY BE COMPARED TO THE DESIGN PROFILE GRADE LINES. IN THE EVENT THAT THE AS-BUILT CENTERLINE LONGITUDINAL GRADE DOES NOT MEET THE CITY MINIMUM STANDARDS, ADDITIONAL LONGITUDINAL GRADES OF THE ADJACENT CURBING AND SIMILAR ROADWAY CROSS-SECTION SURVEYS TO VERIFY THE CORRECT CROSS SLOPE, SHALL BE REQUIRED TO VERIFY THAT THE SYSTEM WILL FUNCTION AS ORIGINALLY DESIGNED.
4. STORM DRAINAGE STRUCTURES SHALL BE LOCATED AND / OR DIMENSIONED FROM CENTERLINES OR LOT LINES AS APPROPRIATE.
5. STORM DRAINAGE PIPE INVERT AND INLET ELEVATIONS SHALL BE RECORDED AND CLEARLY DENOTED AS AS-BUILT INFORMATION. DESIGN ELEVATIONS SHALL BE CROSSED OUT AND AS-BUILT INFORMATION WRITTEN NEXT TO IT.
6. STORM DRAINAGE PIPE MATERIAL, LENGTH, AND SIZE SHALL BE MEASURED AND / OR VERIFIED. THIS INFORMATION IS TO BE CLEARLY INDICATED AS BEING AS-BUILT INFORMATION .
7. ALL APPLICABLE TOPOGRAPHIC INFORMATION PERTINENT TO THE ON-SITE DRAINAGE SYSTEM, SUCH AS DITCHES, SWALES, LAKES, CANALS, ETC. THAT ARE DEEMED NECESSARY BY THE CITY TO VERIFY THE FUNCTIONAL PERFORMANCE OF THE STORMWATER SYSTEM, SHALL BE NOTED. NORMALLY, RECORDING ELEVATIONS EVERY 100 FEET AT THE TOP OF BANK AND TOE OF SLOPE WILL BE REQUIRED. MEASUREMENTS SHALL BE TAKEN AND RECORDED IN ORDER TO ACCURATELY TIE DOWN THESE FEATURES TO THE ROADWAY CENTERLINES AND TO PLAT LINES. WHENEVER POSSIBLE, CONTOUR LINES SHALL BE UTILIZED TO GRAPHICALLY DESCRIBE THESE TOPOGRAPHIC FEATURES .
8. RETENTION AREAS SHALL HAVE THEIR TOP-OF BANK AND BOTTOM ELEVATIONS RECORDED. ACTUAL MEASUREMENTS SHALL BE TAKEN AND DIMENSIONS RECORDED OF THE SIZE OF ALL RETENTION AREAS. MEASUREMENTS SHALL BE DONE FROM TOP-OF-BANK TO TOP-OF-BANK WITH SIDE SLOPES INDICATED. SEPARATE CALCULATIONS SHALL BE SUBMITTED TO INDICATE REQUIRED AND PROVIDED RETENTION VOLUMES.
9. ACTUAL MATERIALS USED AND ELEVATIONS AND DIMENSIONS OF OVERFLOW WEIR STRUCTURES AND SKIMMERS SHALL BE NOTED ON THE AS-BUILT.
10. STORM DRAINAGE SWALE CENTERLINES SHALL BE LOCATED AND ELEVATIONS OF FLOW LINE AND TOP OF BANK SHALL BE RECORDED EVERY 100 FEET. SIDE SLOPES SHALL ALSO BE INDICATED.
11. SANITARY SEWER MANHOLES SHALL BE VERIFIED AND DIMENSIONED FROM STREET CENTERLINES OR LOT LINES AS APPROPRIATE. ALL RIM AND INVERT ELEVATIONS SHALL BE VERIFIED AND RECORDED. THIS INFORMATION SHALL BE CLEARLY INDICATED AS BEING AS-BUILT INFORMATION. DESIGN ELEVATIONS SHALL BE CROSSED OUT AND AS-BUILT INFORMATION WRITTEN NEXT TO IT.
12. FOR SUBDIVISIONS, PROPOSED DESIGN FINISHED FLOOR ELEVATIONS SHALL APPEAR ON ALL SUBDIVISION LOTS ON THE APPROPRIATE PLAN AND PROFILE SHEET AS WELL AS ON THE MASTER DRAINAGE PLAN.

EDGEWATER

REQUIREMENTS FOR AS-BUILT DRAWINGS

FILE NAME: EW_M11.DWG
DETAIL REF: M-11

REQUIREMENTS FOR AS-BUILT DRAWINGS (CONTD.)

13. SANITARY SEWER LINE LENGTHS, SIZES, MATERIAL, ETC., SHALL BE VERIFIED AND RECORDED. THIS INFORMATION IS TO BE CLEARLY INDICATED AS BEING AS-BUILT INFORMATION.
14. SEWER LATERALS SHALL BE VERIFIED AND RECORDED AT THEIR CLEAN-OUT LOCATIONS. STATIONING AND OFFSET DISTANCES SHALL BE MEASURED FROM DOWNSTREAM MANHOLES TOWARDS UPSTREAM MANHOLES.
15. LIFT STATIONS AND FORCE MAINS SHALL BE VERIFIED AND DIMENSIONED FROM STREET CENTERLINES OR LOT LINES AS APPROPRIATE. FORCE MAIN DEPTH AND LOCATION INCLUDING VALVES WILL BE PROVIDED AND TIED TO PERMANENT ABOVE GRADE FEATURES. DIMENSIONAL AND ELEVATION INFORMATION INDICATED ON THE APPROVED PLAN SHALL BE VERIFIED AND RECORDED. THIS INFORMATION SHALL BE CLEARLY INDICATED AS BEING AS-BUILT INFORMATION. BURIED ELECTRICAL SERVICE LINE SHALL BE CLEARLY DIMENSIONED, LOCATED, AND LABELED.
16. CURB CUTS OR METAL TABS, USED TO MARK SEWER LATERALS, WATER SERVICES AND WATER VALVES, SHALL BE VERIFIED FOR PRESENCE AND ACCURACY OF LOCATION.
17. POTABLE AND RECLAIMED WATER MAIN LINES SHALL BE DIMENSIONED OFF THE BACK OF CURB, OR EDGE OF PAVEMENT IF NO CURB IS PRESENT. WATER MAIN LINE MATERIAL SIZE, LENGTH AND DEPTH PLACED SHALL ALSO BE NOTED. LOCATIONS OF VALVES SHALL BE TIED TO PERMANENT ABOVE GRADE FEATURES. THIS INFORMATION SHALL BE CLEARLY INDICATED AS BEING AS-BUILT INFORMATION.
18. POTABLE AND RECLAIMED WATER VALVES, TEES, BENDS, ALL SERVICES, AND FIRE HYDRANTS SHALL BE LOCATED BY TYING THEM TO SANITARY SEWER MANHOLES. SIMILARLY, FORCE MAIN VALVES, TEES, AND BENDS SHALL BE LOCATED IN THE SAME MANNER. STATIONING AND OFFSET DISTANCES SHALL BE MEASURED FROM DOWNSTREAM MANHOLES TO UPSTREAM MANHOLES.
19. FOR PERPENDICULAR CROSSINGS OF STORMWATER, SANITARY SEWER, POTABLE WATER, OR RECLAIMED WATER, THE AS-BUILT PLANS SHALL CLEARLY INDICATE WHICH UTILITIES ARE LOCATED OVER OR UNDER OTHER UTILITIES, AS NECESSARY.
20. ANY SPECIAL FEATURES SUCH AS, CONCRETE FLUMES, LAKE BANKS, WALLS, FENCING, ETC., WHICH WERE A PART OF THE APPROVED CONSTRUCTION DRAWINGS SHOULD ALSO BE LOCATED AND DIMENSIONED.
21. IF AN APPROVED SUBDIVISION PLAT OR SITE PLAN SHOWS A CONSERVATION EASEMENT, THE PROJECT SURVEYOR SHOULD PROVIDE THE EXACT LOCATION OF THE SPECIMEN TREE(S) FROM THE RIGHT-OF-WAY OR PROPERTY LINES AND PROPOSED EASEMENT BOUNDARIES ON THE AS-BUILT DRAWING. THE AS-BUILT LOCATION OF THESE TREES WILL HELP VERIFY THE SUFFICIENCY OF THE CONSERVATION EASEMENT PRIOR TO PLAT RECORDING OR CERTIFICATE OF OCCUPANCY.
22. WHEN STORMWATER, POTABLE WATER, RECLAIMED WATER, OR SANITARY SEWER IMPROVEMENTS ARE ARE LOCATED WITHIN AN EASEMENT, THE AS-BUILT DRAWING SHALL ACCURATELY DEPICT THE LOCATION OF THE EASEMENT ITSELF AS WELL AS THE EXACT LOCATION OF THE IMPROVEMENTS WITHIN THE EASEMENT. THIS IS REQUIRED IN ORDER TO VERIFY THAT THE IMPROVEMENTS HAVE BEEN PROPERLY LOCATED AND TO ENSURE THAT FUTURE SUBSURFACE EXCAVATION TO PERFORM REMEDIAL REPAIR CAN BE ACCOMPLISHED WITHOUT DISTURBANCE BEYOND THE EASEMENT.

NOTE:

1. REFERENCES TO WATER SHALL MEAN BOTH POTABLE AND RECLAIMED WATER.

EDGEWATER

REQUIREMENTS FOR AS-BUILT DRAWINGS

FILE NAME: EW_M12.DWG
DETAIL REF: M-12

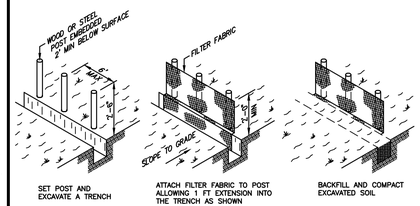

SILT FENCE DETAIL
(PER F.D.O.T. INDEX 102, 2010 EDITION)

NOTES:

1. MATERIALS, CONSTRUCTION METHODS AND MAINTENANCE SHALL BE IN ACCORDANCE WITH THE FLORIDA DEPARTMENT OF TRANSPORTATION STANDARD SPECIFICATIONS AND DESIGN STANDARDS CURRENT EDITION.
2. CONTRACTOR SHALL PROVIDE SILT FENCES AND HAY BALES AT ALL STORMWATER DISCHARGE POINTS FOR EROSION CONTROL AND SEDIMENT CONTROL DURING CONST.
3. CONTRACTOR SHALL ROUGH GRADE STORM- WATER SWALES AND RETENTION AREAS PRIOR TO CONSTRUCTION OF SITE IMPROVEMENTS.
4. CONTRACTOR SHALL MEET ALL PERMIT CONDITIONS AS ESTABLISHED BY THE CITY AND ALL OTHER APPLICABLE AGENCIES, INCLUDING BUT NOT LIMITED TO COUNTY, FDOT, AND THE SJRWMD.

EDGEWATER

SILT FENCE TURBIDITY BARRIER

FILE NAME: EW_R22.DWG
DETAIL REF: R-22

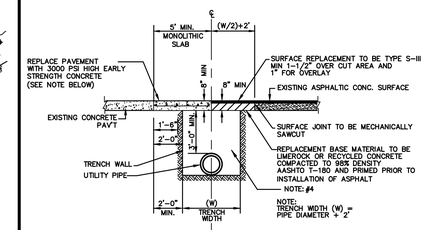

PORTLAND CEMENT CONCRETE SURFACE | ASPHALTIC CONCRETE SURFACE

NOTES:

1. PAVING REPLACEMENT SHALL INCLUDE RAISING ALL MANHOLE FRAMES AND LIDS AND VALVE BOXES AND LIDS (AND SIMILAR APPURTENANCES) TO FINAL ELEVATION PRIOR TO RESURFACING
2. SUBBASE TO BE COMPACTED TO 98% MAXIMUM DENSITY AASHTO T-180
3. IN AREAS WHERE CONCRETE PAVEMENT IS TO BE UTILIZED, 3000 PSI = 28 DAY STRENGTH CONCRETE PAVEMENT MAY BE PERMITTED PROVIDED THAT THE SUBJECT AREA WILL REMAIN FREE OF VEHICULAR TRAFFIC FOR A MINIMUM OF 3 DAYS.
4. 350 PSI. FLOWABLE FILL SHALL BE USED UPON DIRECTION BY CITY ENGINEER.

EDGEWATER

STANDARD CONSTRUCTION DETAIL
PAVEMENT TRENCH RESTORATION

FILE NAME: EW_ST3.DWG
DETAIL REF: ST-3

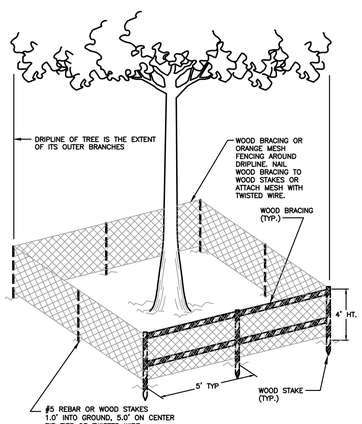

NOTE: BARBED WIRE FENCING IS NOT PERMISSIBLE

EDGEWATER

TREE PROTECTION BARRICADE

FILE NAME: EW_R23.DWG
DETAIL REF: R-23

CONTRACTOR REQUIREMENTS FOR SITE CLEARING, GRADING, AND EROSION CONTROL DESIGN AND CONSTRUCTION NOTES

THE FOLLOWING MEASURES REPRESENT MINIMUM STANDARDS TO BE ADHERED TO BY THE CONTRACTOR THROUGHOUT THE CONSTRUCTION OF A PROJECT. THE CITY RESERVES THE RIGHT TO REQUIRE ADDITIONAL MEASURES TO BE EMPLOYED WHEN WARRANTED BY EXTREME CONDITIONS AND/OR THE FAILURE OF THE CONTRACTOR TO EMPLOY THE APPROPRIATE EROSION CONTROL BEST MANAGEMENT PRACTICES. FAILURE TO COMPLY WITH THESE PROVISIONS SHALL RESULT IN THE ISSUANCE OF A "STOP WORK ORDER".

1. NO DISTURBANCE OF PROPOSED CONSERVATION EASEMENTS, NATURAL BUFFERS, OR WATER BODIES IS PERMITTED. THE CONTRACTOR SHALL LOCATE THESE AREAS ON SITE AND BARRICADE THEM TO AVOID ANY UNAUTHORIZED CLEARING. BARRICADES AND OTHER PROTECTIVE FENCING ARE TO BE LOCATED AT THE DRIP LINE OF EXISTING NATIVE TREES OR AT THE EDGE OF THE NATIVE UNDER-STORY HABITAT, WHICHEVER IS NEAREST TO THE CONSTRUCTION ACTIVITY.
2. SPECIMEN AND HISTORIC TREES, CONSERVATION EASEMENTS, NATURAL VEGETATION BUFFERS, AND SIMILAR AREAS MUST BE PROTECTED BY BARRICADES OR FENCING PRIOR TO CLEARING. BARRICADES ARE TO BE SET AT THE DRIP LINE OF THE TREES AND MAINTAINED THROUGHOUT THE DURATION OF THE PROJECT. BARBED WIRE IS NOT PERMITTED AS A PROTECTIVE BARRIER.
3. WHERE A CHANGE OF GRADE OCCURS AT THE DRIP LINE OF A SPECIMEN TREE, SILT FENCES WILL BE REQUIRED DURING CONSTRUCTION AND RETAINING WALLS MUST BE INSTALLED PRIOR TO FINAL ACCEPTANCE BY THE CITY.
4. IT SHALL BE THE RESPONSIBILITY OF THE CONTRACTOR TO HAVE ALL PROTECTIVE VEGETATION BARRICADES AND EROSION CONTROL STRUCTURES AND MEASURES IN PLACE PRIOR TO THE COMMENCEMENT OF ANY EARTHWORK, INCLUDING PRELIMINARY GRUBBING. THESE MEASURES INCLUDE, BUT ARE NOT LIMITED TO, TEMPORARY CONSTRUCTION FENCES, HAY BALES, SILT FENCES, AND FLOATING TURBIDITY BARRIERS. FURTHER, IT SHALL BE THE RESPONSIBILITY OF THE CONTRACTOR TO MAINTAIN ALL EROSION CONTROL DEVICES THROUGHOUT THE DURATION OF THE ENTIRE PROJECT. MAINTENANCE SHALL INCLUDE PERIODIC INSPECTION AND REMOVAL OF DEBRIS ABUTTING EROSION CONTROL DEVICES.
5. PRIOR TO THE INSTALLATION OF ANY FILL MATERIALS ON SUBJECT SITE, SILT FENCES SHALL BE INSTALLED (1) ALONG SUBJECT SITE BOUNDARY AND PROPERTY LINES, (2) AT THE EDGE OF CONSERVATION EASEMENTS AND WETLANDS, (3) ADJACENT TO NATURAL LANDSCAPE BUFFERS, (4) AROUND THE PERIMETER OF EXISTING STORM WATER TREATMENT FACILITIES, AND (5) AT ANY ADDITIONAL AREAS THAT THE CITY DEEMS NECESSARY TO BE PROTECTED FROM POTENTIAL EROSION IMPACTS DURING CONSTRUCTION. THESE CONDITIONS SHALL APPLY IN ALL INSTANCES WHERE FILL MATERIAL IS BEING INSTALLED WITHIN 25 FEET OF ANY OF THE AFOREMENTIONED LOCATIONS. WHILE THESE ITEMS REPRESENT THE MINIMUM REQUIREMENTS, THE CITY RESERVES THE RIGHT TO IMPOSE ADDITIONAL PROTECTIVE MEASURES, AS DETERMINED DURING ACTUAL SITE VISITS CONDUCTED AS PART OF THE STANDARD REVIEW OF THE SITE-SPECIFIC CLEARING PERMIT APPLICATION AND THROUGHOUT PROJECT CONSTRUCTION.
6. WHERE FILL MATERIAL IS INTENDED TO BE INSTALLED ADJACENT TO EXISTING VEGETATION WHICH IS INTENDED TO REMAIN NATURAL, THE CONTRACTOR MAY INSTALL SILT FENCING AS A TREE PROTECTION MEASURE, IN LIEU OF INSTALLING EITHER WOOD BRACING OR ORANGE MESH FENCING. THIS PRACTICE IS ENCOURAGED BY THE CITY. IF THE SILT FENCE FAILS TO PROVIDE ADEQUATE PROTECTION FROM IMPACT DUE TO CONSTRUCTION, THEN ADDITIONAL CONSTRUCTION FENCING OR WOOD BRACING SHALL BE REQUIRED.
7. AT A MINIMUM, THE CONTRACTOR SHALL SEED AND MULCH ALL DISTURBED AREAS. SUFFICIENT GRASS COVERAGE IS TO BE ESTABLISHED WITHIN THIRTY DAYS. - DISTURBED AREAS IN CITY RIGHT-OF-WAYS OR CITY PROPERTY SHALL BE SODDED.
8. IT SHALL BE THE RESPONSIBILITY OF THE CONTRACTOR THROUGH SCHEDULING, TO MINIMIZE THE DISTURBANCE OF SITE AREAS THAT HAVE BEEN BROUGHT TO THEIR PROPOSED FINAL GRADE. WITHIN TWENTY DAYS OF BRINGING A SUBJECT AREA TO ITS FINAL GRADE, THE CONTRACTOR SHALL INSTALL SEED AND MULCH OR SOD, AS REQUIRED.

EDGEWATER

CONTRACTOR REQUIREMENTS FOR SITE CLEARING, GRADING, AND EROSION CONTROL DESIGN AND CONSTRUCTION NOTES

FILE NAME: EW_R25.DWG
DETAIL REF: R-25

CONTRACTOR REQUIREMENTS FOR SITE CLEARING, GRADING, AND EROSION CONTROL DESIGN AND CONSTRUCTION NOTES (CONTD.)

9. FOR INDIVIDUAL CONSTRUCTION PROJECTS INVOLVING MULTIPLE PHASES, UPON COMPLETION OF EACH PHASE OF THE PROJECT, SEEDING AND MULCHING AND OR/ SODDING IS TO BE PERFORMED PRIOR TO COMMENCING THE NEXT PHASE OF CONSTRUCTION.
10. ONCE AN AREA IS SEEDED OR SODDED, IT MUST BE MAINTAINED BY THE CONTRACTOR TO ALLOW THE GRASS TO BECOME ESTABLISHED.
11. ANY BURNING OF CLEARED MATERIALS MUST BE INSPECTED AND PERMITTED ON A DAILY BASIS. CONTACT THE CITY FIRE MARSHALL AT 424-2412 PRIOR TO EACH DAY OF DESIRED BURNING.
12. ABSOLUTELY NO BURYING OF CLEARED MATERIALS IS PERMITTED.
13. THE REMOVAL OF ALL VEGETATION AND TOPSOIL ON THE FUTURE ROADWAY, PARKING AND BUILDING LOT AREAS IS REQUIRED TO BE COMPLETED PRIOR TO THE PLACEMENT OF FILL ON THOSE AREAS. THE TOPSOIL MAY BE TEMPORARILY STOCKPILED AND USED AS TOPSOIL OVER OVER PROPOSED GREEN AREAS SUCH AS PLANT BEDS, SODDED AREAS, AND WHERE TREES ARE TO BE INSTALLED OR RELOCATED.
14. A SIGNED, DATED, AND SEALED LETTER FROM A SOILS ENGINEER OR THE ENGINEER OF RECORD CERTIFYING THAT THE AREAS TO BE FILLED HAVE BEEN STRIPPED OF ORGANIC MATERIALS, MUST BE SUBMITTED TO THE CITY PRIOR TO FILLING.
15. FILL MATERIAL IS TO BE PLACED IN ONE FOOT LIFTS AND COMPACTED TO THE APPROPRIATE DENSITY (98% FOR PAVED AREAS AND 95% FOR BUILDING PADS AND ALL OTHER AREAS AS PER AASHTO T-180).
16. DURING SUBDIVISION DEVELOPMENT WHEN FUTURE BUILDING LOTS ARE FILLED AS PART OF THE OVERALL SUBDIVISION IMPROVEMENTS, COMPACTION TEST REPORTS MUST BE PERFORMED ON THE BUILDING LOTS AT 300 FOOT INTERVALS. THESE TESTS ARE TO BE PERFORMED IN ONE-FOOT VERTICAL INCREMENTS. THE RESULTS OF THESE TESTS ARE TO BE SUBMITTED TO THE CITY UPON COMPLETION OF THE TESTS.
17. IF ANY MUCK MATERIAL IS DISCOVERED, IT SHALL BE REQUIRED TO BE REMOVED AND REPLACED WITH A SUITABLE MATERIAL THAT IS PROPERLY BACKFILLED, COMPACTED AND TESTED USING AASHTO T-180 MODIFIED PROCTOR METHOD.
18. STOCKPILING IS NOT GENERALLY PERMITTED BY THE CITY. WHEN ALLOWED, STOCKPILES SHALL NOT EXCEED SIX FEET IN HEIGHT MEASURED FROM THE ORIGINAL GRADE. AT A MINIMUM, STOCK PILES THAT WILL REMAIN IN PLACE IN EXCESS OF TWENTY DAYS SHOULD BE SEEDED AND MULCHED IMMEDIATELY UPON PLACEMENT OF THE FINAL LIFT.
19. SOILS ARE TO BE STABILIZED BY WATER OR OTHER MEANS DURING CONSTRUCTION. THIS IS INTENDED TO REDUCE SOIL EROSION AND THE IMPACT TO NEIGHBORING COMMUNITIES. ADEQUATE WATERING METHODS SHOULD BE EMPLOYED TO ALLOW DAILY COVERAGE OF THE ENTIRE LIMITS OF ALL AREAS THAT DO NOT HAVE AN ESTABLISHED VEGETATIVE COVER. METHODS TO BE EMPLOYED INCLUDE, BUT ARE NOT LIMITED TO, WATER TRUCKS, PERMANENT IRRIGATION SYSTEMS, TEMPORARY SPRINKLER SYSTEMS OPERATED BY PUMPING UNITS CONNECTED TO WET RETENTION PONDS, WATER CANNONS, TEMPORARY IRRIGATION SYSTEMS MOUNTED ATOP STOCKPILE AREAS, AND OTHER METHODS AS DEEMED NECESSARY BY THE CITY.
20. ALL FILL MATERIALS LOCATED BENEATH STRUCTURES AND PAVEMENT SHALL CONSIST OF CLEAN GRANULAR SAND FREE FROM ORGANICS AND SIMILAR MATERIAL THAT COULD DECOMPOSE.
21. ALL FILL TO BE PLACED IN LANDSCAPED AREAS SHALL HAVE A Ph RANGE BETWEEN 5.5 AND 7.5, BE ORGANIC IN NATURE, FREE OF ROCKS AND DEBRIS, OR MATCH NATIVE EXISTING SOILS.

EDGEWATER

CONTRACTOR REQUIREMENTS FOR SITE CLEARING, GRADING, AND EROSION CONTROL DESIGN AND CONSTRUCTION NOTES

FILE NAME: EW_R26.DWG
DETAIL REF: R-26

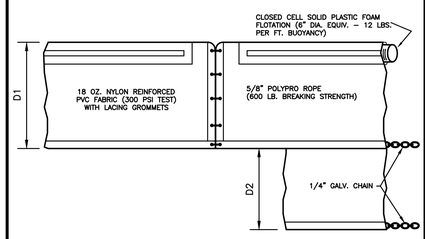

FLOATING TURBIDITY BARRIER
(PER F.D.O.T. INDEX 103, 2010 EDITION)

D1 - 5 FT. STD. SINGLE PANEL FOR DEPTHS 5 FT. OR LESS

D2 - 5 FT. STD. ADDITIONAL PANEL FOR DEPTHS GREATER THAN 5 FT.

CURTAIN TO REACH BOTTOM UP TO DEPTHS OF 10 FT.
TWO PANELS TO BE USED FOR DEPTHS GREATER THAN 10 FT.

EDGEWATER

STANDARD CONSTRUCTION DETAIL
FLOATING TURBIDITY BARRIER

FILE NAME: EW_R24.DWG
DETAIL REF: R-24

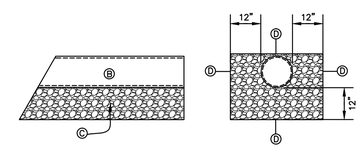

ELEVATION
N.T.S.

SECTION
N.T.S.

Ⓑ PERFORATED HDPE PIPE OR APPROVED EQUAL BY ENGINEER
Ⓒ 3/4" WASHED ROCK, #57 AGGREGATE.
Ⓓ FILTER CLOTH ON ALL SIDES & OVERLAPPING AT TOP.

EDGEWATER

STANDARD CONSTRUCTION DETAIL
EXFILTRATION TRENCH

FILE NAME: EW_ST13.DWG
DETAIL REF: ST-13

No.	BY	REVISIONS	DATE	No.	BY	REVISIONS	DATE

QUENTIN L. HAMPTON ASSOCIATES, INC.
CONSULTING ENGINEERS
FLORIDA CERTIFICATE-of-AUTHORIZATION No. 626
PHONE: (386) 761-6810 FAX: (386) 761-3977

CITY of
EDGEWATER
VOLUSIA COUNTY, FLORIDA

LAMONT AND HUBBELL STREET STORMWATER IMPROVEMENTS
PROJECT No. EW111

STANDARD DETAILS STORM WATER
DRAWN BY: MS

ANDREW M. GIANNINI, P.E.
FLORIDA REGISTRATION #46601

SHEET No.
11
OF 14

E:\EW\EW111 Lamont & Hubbell Ave Stormwater Improvements\Production\Design\EW111 100% Plans.dwg 12/14/2016 11:48:18 AM, DWG To PDF.pc3

STORM DRAINAGE DESIGN AND CONSTRUCTION NOTES

ALL MATERIALS AND INSTALLATION METHODS USED FOR LAND DEVELOPMENT CODE REQUIRED IMPROVEMENTS FOR SUBDIVISIONS AND SITE PLANS SHALL BE IN CONFORMANCE WITH THE CITY, FDOT STANDARD SPECIFICATIONS FOR ROAD AND BRIDGE CONSTRUCTION (LATEST EDITION), AND THE FDOT ROADWAY AND TRAFFIC DESIGN STANDARDS (LATEST EDITION).

1. ALL STORM SEWERS AND CULVERTS LOCATED IN ROADWAY RIGHTS-OF-WAY AND ROADWAY EASEMENTS SHALL BE A MINIMUM OF CLASS III REINFORCED CONCRETE PIPE. PRIVATE SITES AND AREAS OUTSIDE OF ROADWAY EASEMENTS AND R.O.W., PIPE MAY BE MADE OF ALTERNATE MATERIALS INCLUDING:

   A. SMOOTH INNER WALL HIGH DENSITY POLYETHYLENE (HDPE) IN ACCORDANCE WITH AASHTO M-294, AASHTO MP7, ASTM D3350 AND ASTM D2412 FOR SIZES UP TO 42" IN DIAMETER OR

   B. PVC IN ACCORDANCE WITH THE PROVISION NOTED IN THE "SEWER DETAILS" OF THESE SPECIFICATIONS.

2. ALL STORM SEWER PIPE JOINTS LOCATED IN ROADWAY RIGHTS-OF-WAY AND ROADWAY EASEMENTS SHALL BE ENTIRELY WRAPPED WITH FILTER FABRIC WITH A MINIMUM WIDTH OF 24" AND A MINIMUM OF 24" OVERLAP SECURED WITH PLASTIC OR STAINLESS BANDS. GASKETS ARE NOT PERMITTED AS AN EQUIVALENT SUBSTITUTE FOR MEETING THIS REQUIREMENT. THIS PRACTICE IS REQUIRED ON PRIVATE SITES ADDITIONALLY, ALL JOINTS SHALL BE RUBBER GASKETED FOR BOTH ROUND AND ELLIPTICAL PIPE.

3. DEPTH OF COVER MEASURED TO THE TOP OF PIPE (NOT INCLUDING THE BELL JOINT) SHALL BE A MINIMUM OF 1 FOOT. DEVIATION FROM THIS REQUIREMENT MAY BE ALLOWED BY INCREASING THE PIPE'S STRUCTURAL CAPACITY. THIS DEVIATION MUST BE SPECIFIED ON THE PLANS APPROVED FOR CONSTRUCTION AND SUBSEQUENTLY REFLECTED ON THE SHOP DRAWINGS AND AS-BUILT PLANS.

4. ALL STORM DRAINAGE PIPES LOCATED IN ROADWAY RIGHTS-OF-WAY AND ROADWAY EASEMENTS SHALL BE A MINIMUM OF TWELVE INCH (12") DIAMETER OR EQUIVALENT AND BE DESIGNED FOR A MINIMUM OF A TWENTY-FIVE (25) YEAR STORM OF TWENTY-FOUR (24) HOUR DURATION. STORM DRAINAGE PIPES SMALLER THAN 12" ARE PERMITTED ON PRIVATE SITE PLANS PROVIDING THAT MAINTENANCE SHALL BE PERFORMED BY THE OWNER.

5. STORM INLETS, MANHOLES, AND CATCH BASINS SHALL BE EITHER POURED IN PLACE OR PRECAST REINFORCED CONCRETE. STRUCTURES SHALL BE REQUIRED AT EACH CHANGE OF PIPE SIZE OR CHANGE IN PIPE DIRECTION. ALL STRUCTURES SHALL BE IN COMPLIANCE WITH ASTM C-478 AND SHALL HAVE 8" THICK WALLS. 6" THICK WALLS MAY BE PERMITTED PROVIDING THAT THE PLANS SPECIFY INCREASED REINFORCEMENT IN ACCORDANCE WITH FDOT STANDARD INDEX NO. 201 IN ADDITION, THIS REQUIREMENT MUST BE REFLECTED ON BOTH THE SHOP DRAWING AND AS-BUILT PLANS. NOTE: INLET APRONS MAY REQUIRE EXPANSION JOINTS AROUND THE STRUCTURE AS DICTATED BY THE CITY.

6. STORM INLETS SHALL BE SPACED IN SUCH A MANNER AS TO ACCEPT ONE HUNDRED (100) PERCENT OF THE DESIGN STORM RUNOFF WITHOUT IMPEDING THE FLOW OF TRAFFIC. FOR ROADWAY SECTIONS WITH DESIGN SPEEDS OF 45 MPH AND LESS AND WITHOUT FULL WIDTH SHOULDERS, SPREAD RESULTING FROM A RAINFALL INTENSITY OF FOUR INCHES (4 ") PER HOUR SHALL NOT EXCEED ONE-HALF OF THE TRAVEL LANE ADJACENT TO THE GUTTER. FOR SITE PLANS, INLET SPACING SHALL BE DESIGNED TO ACCEPT ONE HUNDRED (100) PERCENT OF THE RUNOFF FROM A RAINFALL INTENSITY OF FOUR INCHES (4") PER HOUR WITHOUT RESULTING IN PONDING OF WATER AROUND THE INLET.

7. LAKE DEPTHS SHALL BE EIGHT FEET (8') MINIMUM TO TWELVE FEET (12') MAXIMUM, MEASURED FROM HIGH WATER MARK.

EDGEWATER	STORM DRAINAGE DESIGN AND CONSTRUCTION NOTES	FILE NAME: EW_ST4.DWG DETAIL REF: ST-4

STORM DRAINAGE DESIGN AND CONSTRUCTION NOTES (CONTD.)

8. FOR CONNECTIONS BETWEEN INLETS WITH PIPING 15" IN DIAMETER AND LARGER, THE MAXIMUM DISTANCES BETWEEN INLETS AND / OR CLEAN-OUT JUNCTION BOXES SHALL BE 300 FEET. CULVERTS SHALL BE SLOPED TO MAINTAIN A MINIMUM SELF-CLEANING VELOCITY OF 3 FEET PER SECOND USING A MANNING'S 'n' OF 0.012. SPACING FOR CLEAN-OUTS AND INLETS FOR SMALLER PIPING SHALL BE REDUCED AND EVALUATED ON A CASE BY CASE BASIS.

9. THE MAXIMUM PERMISSIBLE SLOPE OF ANY NEW SITE GRADING IS 3:1 (HORIZONTAL:VERTICAL). THIS LIMIT SHALL BE APPLIED TO ALL AREAS EXCEPT STORMWATER CONVEYANCE AND TREATMENT SYSTEMS WHICH HAVE A MAXIMUM SLOPE OF 4:1 (EXCEPT BELOW THE WATER TABLE WHERE SHARPER SLOPES ARE PERMISSIBLE.)

10. ALL SWALES AND DITCHES SHALL HAVE A MAXIMUM PERMITTED SIDE SLOPE NOT GREATER THAN 4 TO 1 AT A MINIMUM. THE MAXIMUM PERMITTED BACKSLOPE, SHALL BE 3-1, PROVIDED THAT A 2' WIDE BERM IS INSTALLED. DESIGN CENTERLINE AND TOP-OF-BANK ELEVATIONS SHALL BE NOTED AT INTERVALS OF 100'.

11. SWALES THAT ARE NORMALLY DRY AND INTENDED FOR CONVEYANCE OF STORMWATER RUNOFF AND ARE NOT INTENDED FOR RETENTION SHALL HAVE A MINIMUM DRAINAGE MAINTENANCE EASEMENT WIDTH MEASURING 15 FEET. SWALED AREAS INTENDED FOR RETENTION SHALL PROVIDE APPROPRIATE EASEMENT AREAS FOR ACCESS AND MAINTENANCE MEASURED UPLAND FROM THE TOP OF BANK. AT A MINIMUM, THE SAID EASEMENT SHALL MEASURE 10' FEET IN WIDTH FROM THE TOP OF THE SWALE.

12. PIPED STORMWATER SYSTEMS SHALL HAVE A MINIMUM DRAINAGE MAINTENANCE EASEMENT WIDTH OF 20 FEET, AND MAY BE INCREASED DEPENDING UPON THE SIZE AND DEPTH OF PIPE.

13. NORMAL ROADSIDE SWALES ARE PERMITTED TO BE CONSTRUCTED TO A MAXIMUM DEPTH OF 18" BELOW THE OUTSIDE EDGE OF PAVEMENT OR CONCRETE CURB.

14. CONCRETE EROSION CONTROL MUST BE PROVIDED WHERE SWALES OR CULVERTS INTERCEPT DRAINAGE DITCHES.

15. WHEN A LAKE IS INCORPORATED WITHIN A SUBDIVISION AND IS ABUTTED BY LOTS, SUCH ABUTTING LOT LINES SHALL BE EXTENDED INTO THE LAKE PROPORTIONATELY ENCOMPASSING ALL OF THE LAKE AREA.

16. LAKE INFLOW AND OUTLET STRUCTURES SHALL GENERALLY BE CONSTRUCTED WITH REINFORCED CONCRETE AND SHALL BE SUBJECT TO THE APPROVAL OF THE CITY. SKIMMERS FOR WET PONDS SHALL BE CONSTRUCTED SUCH THAT THE BOTTOM EXTENDS 6" BELOW THE NORMAL WATER LEVEL AND 6" ABOVE THE OVERFLOW. FOR DRY PONDS, THE SKIMMER BOTTOM SHALL BE SET 6" BELOW THE LOWEST OVERFLOW ELEVATION AND 6" ABOVE THE HIGHEST POINT OF OVERFLOW. ALL SKIMMERS SHALL BE CONSTRUCTED OF MINIMUM 1/4" THICK ALUMINUM OR FIBERGLASS ADEQUATELY SUPPORTED TO PREVENT DEFLECTION.

EDGEWATER	STORM DRAINAGE DESIGN AND CONSTRUCTION NOTES	FILE NAME: EW_ST5.DWG DETAIL REF: ST-5

STORM DRAINAGE DESIGN AND CONSTRUCTION NOTES (CONTD.)

17. EROSION AND SEDIMENT CONTROL PLANS AS APPROVED BY THE FLORIDA DEPARTMENT OF ENVIRONMENTAL PROTECTION SHALL BE EMPLOYED AT ALL TIMES. AT A MINIMUM, BEST MANAGEMENT PRACTICES (BMP's) SHALL BE UTILIZED.

18. THE CITY MAY REQUEST THAT THE DEVELOPER SUBMIT A REPORT BY A QUALIFIED HYDROLOGIST ON THE IMPACT THE LAKE WILL HAVE ON NEIGHBORING WATER TABLE ELEVATIONS BOTH DURING CONSTRUCTION AND AFTER LAKE COMPLETION. THE CITY MAY REQUIRE GROUNDWATER MONITORING DURING THE LAKE EXCAVATION.

19. ADEQUATE MAINTENANCE EASEMENTS OR RIGHTS-OF-WAY AS APPROVED BY THE CITY SHALL BE PROVIDED AROUND THE ENTIRE PERIMETER OF ALL LAKES AND ASSOCIATED OUTFALLS DISCHARGING INTO AND OUT OF LAKES. APPLICABLE CROSS SECTIONS SHALL BE INCLUDED ON ALL FINAL DEVELOPMENT PLANS.

20. DEVELOPMENT PLANS FOR ALL STORMWATER MANAGEMENT SYSTEMS SHALL CONTAIN POP-OFF DATA (OVERFLOW), BOTTOM ELEVATION, NORMAL WATER LEVELS, MEAN ANNUAL SEASONAL HIGH WATER TABLE ELEVATION, TREATMENT VOLUME AND CORRESPONDING ELEVATION, 100 YEAR HIGH WATER LEVELS, AND THE DESIGN TAILGATER ELEVATION (IF APPLICABLE).

21. IN GENERAL, ALL RETENTION / DETENTION SITES MUST BE CONSTRUCTED ON ALL PROJECTS PRIOR TO ANY ROAD, PARKING LOT, OR BUILDING CONSTRUCTION COMMENCING OR AS CURRENT PERMIT CONDITIONS DICTATE. SEWER AND WATER MAINS MAY BE INSTALLED PRIOR TO RETENTION/DETENTION SITE CONSTRUCTION IF DEWATERING IS NOT REQUIRED.

22. THE CONTRACTOR SHALL BE RESPONSIBLE TO OBTAIN ANY AND ALL DENATURING PERMITS THAT MAY BE REQUIRED.

23. WHEN CULVERTS ARE INSTALLED TO MAINTAIN THE FLOW OF EXISTING DRAINAGE WAYS WHERE NEWLY PROPOSED ROADS WOULD OTHERWISE SEVER THE DRAINAGE WAY, THEN CULVERTS CROSSING RIGHTS-OF-WAY SHALL EXTEND FROM RIGHT-OF-WAY LINE TO RIGHT-OF-WAY LINE UNDER THE ROADWAY. CULVERTS SHALL BE DESIGNED TO ACCOMMODATE THE FLOW FROM THE 100 YEAR - 24 HOUR STORM EVENT WITHOUT FLOODING ADJACENT PROPERTY OR SURCHARGING THE SAID ROADWAY.

24. IT SHALL BE THE RESPONSIBILITY OF THE CONTRACTOR TO REVIEW AND MAINTAIN A COPY OF THE SJRWMD PERMIT AND/ OR NPDES CONSTRUCTION PERMIT AT THE CONSTRUCTION SITE, AND ABIDE BY ALL CONDITIONS OF THE PERMIT.

25. LANDSCAPE PLANS SHALL CLEARLY DEPICT THE DESIGN LOCATION OF PLANTINGS RELATIVE TO THE LOCATION OF PUBLIC UTILITIES AND STORMWATER INFRASTRUCTURE IN ORDER TO EVALUATE POTENTIAL CONFLICTS.

EDGEWATER	STORM DRAINAGE DESIGN AND CONSTRUCTION NOTES	FILE NAME: EW_ST6.DWG DETAIL REF: ST-6

LOCATION OF PUBLIC WATER SYSTEM MAINS IN ACCORDANCE WITH F.A.C. RULE 62-555.314

OTHER PIPE	HORIZONTAL SEPARATION	CROSSINGS (1)	JOINT SPACING @ CROSSING (FULL JOINT CENTERED)
STORM SEWER STORMWATER FORCE MAIN, RECLAIMED WATER (2)	WATER MAIN 3 FT. MINIMUM	WATER MAIN 12 INCHES IS THE MINIMUM EXCEPT FOR STORM SEWER,THEN 6 INCHES IS THE MINIMUM AND 12 INCHES IS PREFERRED	ALTERNATE 3' FT. MINIMUM WATER MAIN
VACUUM SANITARY SEWER	WATER MAIN 10 FT. PREFERRED 3 FT. MINIMUM	WATER MAIN 12 INCHES PREFERRED 6 INCHES MINIMUM	ALTERNATE 3' FT. MINIMUM WATER MAIN
GRAVITY SEWER SANITARY SEWER, SANITARY SEWER FORCE MAIN, RECLAIMED WATER (4)	WATER MAIN 10 FT. PREFERRED 3 FT. MINIMUM (3)	WATER MAIN 12 INCHES IS THE MINIMUM EXCEPT FOR GRAVITY SEWER,THEN 6 INCHES IS THE MINIMUM AND 12 INCHES IS PREFERRED	ALTERNATE 6' FT. MINIMUM WATER MAIN
ON-SITE SEWAGE TREATMENT & DISPOSAL SYSTEM	10 FT MINIMUM	---	---

(1) WATER MAIN SHOULD CROSS ABOVE OTHER PIPE. WHEN WATER MAIN MUST BE BELOW OTHER PIPE,THE MINIMUM SEPARATION IS 12 INCHES.
(2) RECLAIMED WATER REGULATED UNDER PART III OF CHAPTER 62-610, F.A.C.
(3) 3 FT. FOR GRAVITY SANITARY SEWER WHERE THE BOTTOM OF THE WATER MAIN IS LAID AT LEAST 6 INCHES ABOVE THE TOP OF GRAVITY SANITARY SEWER.
(4) RECLAIMED WATER NOT REGULATED UNDER PART III OF CHAPTER 62-210, F.A.C.

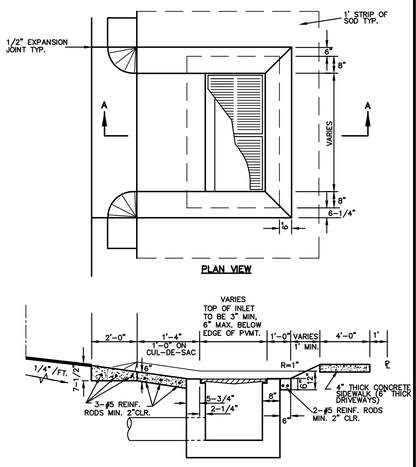

EDGEWATER	STANDARD CONSTRUCTION DETAIL STORM INLET APRON	FILE NAME: EW_ST1.DWG DETAIL REF: ST-1

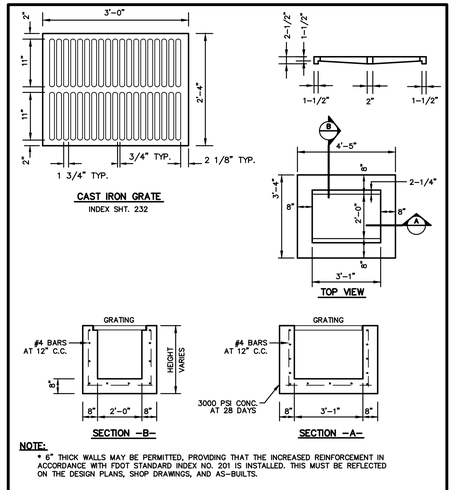

EDGEWATER	STANDARD CONSTRUCTION DETAIL TYPE "C" STORM INLET	FILE NAME: EW_ST11.DWG DETAIL REF: ST-11

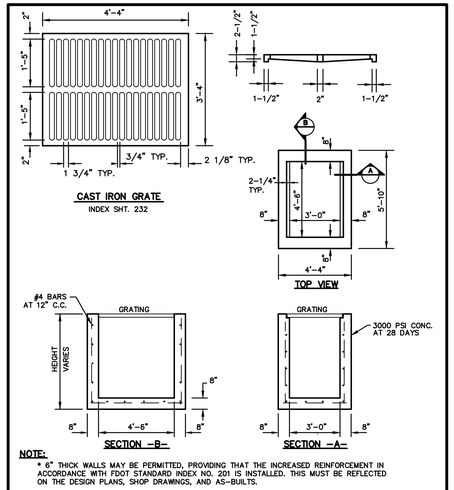

EDGEWATER	STANDARD CONSTRUCTION DETAIL TYPE "E" STORM INLET	FILE NAME: EW_ST12.DWG DETAIL REF: ST-12

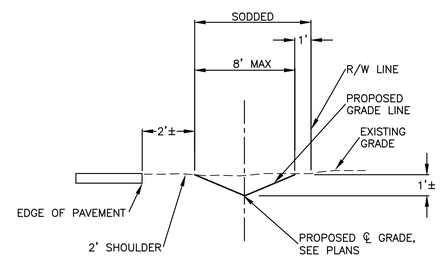

1' DEEP SODDED SWALE DETAIL
NOT TO SCALE

No.	BY	REVISIONS	DATE	No.	BY	REVISIONS	DATE

QUENTIN L. HAMPTON ASSOCIATES, INC.
CONSULTING ENGINEERS
FLORIDA CERTIFICATE-of-AUTHORIZATION No. 626
PHONE: (386) 761-6810 FAX: (386) 761-3977

CITY of EDGEWATER
VOLUSIA COUNTY, FLORIDA

LAMONT AND HUBBELL STREET STORMWATER IMPROVEMENTS
PROJECT No. EW111

STANDARD DETAILS STORM WATER
DRAWN BY: MS

ANDREW M. GIANNINI, P.E.
FLORIDA REGISTRATION #46601

SHEET No. 12 OF 14

S:\EW\EW111 Lamont & Hubbell Area Stormwater Improvements\Production\Design\EW111 100% Plans.dwg 12/14/2016 11:46:40 AM, DWG To PDF.pc3

SYMBOLS

- Work Area
- Channelizing Device (See Index 600)
- Work Zone Sign
- (CR) Required Locations For Either Temporary Or Permanent Curb Ramps.
- Lane Identification + Direction of Traffic
- Pedestrian Longitudinal Channelizing Device (LCD) with Mounted Work Zone Sign
- Pedestrian Longitudinal Channelizing Device (LCD)

GENERAL NOTES

1. Route pedestrian traffic around work areas when construction activities encroach on the sidewalk for more than 60 minutes using the devices and remedies shown on this Index. Use project specific designs for scenarios not included on this Index.
2. For spacing of traffic control devices and general TCZ requirements refer to Index 600. The maximum spacing between barricades, vertical panels, drums or tubular markers is 25'.
3. Use delineators on longitudinal channelizing devices separating the work area from vehicular traffic.
4. Cover or deactivate pedestrian traffic signal display(s) controlling closed crosswalks.
5. Post mounted signs located near or adjacent to a sidewalk must have a 7' minimum clearance from the bottom of sign to the surface of the sidewalk.
6. When construction activities involve sidewalks on both sides of the street, stage the construction so that one sidewalk is in service at all times. If this is not feasible and both sidewalks must be closed, as determined by the Engineer, provide a detour to guide pedestrians around the construction zone.
7. Provide a 5' wide temporary walkway, except where space restrictions warrant a minimum width of 4'. Provide a 5' x 5' passing space for temporary walkways less than 5' in width at intervals not to exceed 200'.
8. Provide a cross-slope with a maximum value of 0.02 for all temporary walkways.
9. Temporary walkway surfaces and ramps must be stable, firm, slip resistant, and kept free of any obstructions and hazards such as holes, debris, mud, construction equipment and stored materials.
10. Remove temporary walkways immediately after reopening of the sidewalk, unless otherwise noted in the plans.
11. Meet the requirements of Index 304 for temporary curb ramps.
12. Place pedestrian longitudinal channelizing device(s) across the full width of the closed sidewalk. For temporary walkways, similar to the Sidewalk Diversion, place LCD's to delineate both sides of the temporary walkway.

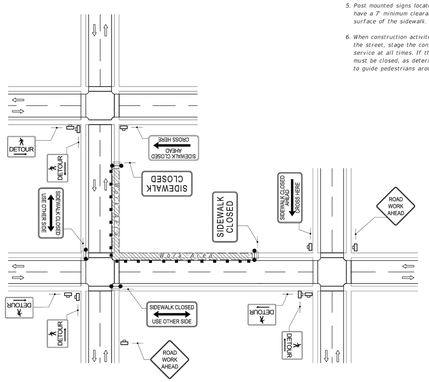

CROSSWALK CLOSURE AND PESESTRIAN DETOUR

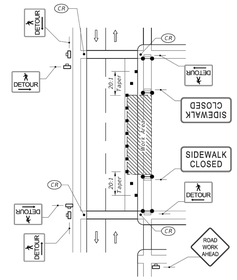

SIDEWALK DETOUR

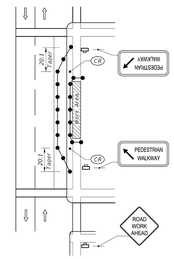

SIDEWALK DIVERSION

LAST REVISION	REVISION	DESCRIPTION:	FDOT 2016 DESIGN STANDARDS	PEDESTRIAN CONTROL FOR CLOSURE OF SIDEWALKS	INDEX NO.	SHEET NO.
07/01/15					660	1 of 1

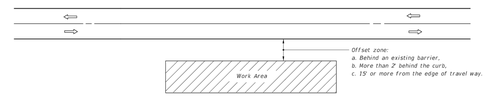

GENERAL NOTES

1. If the work operation (excluding establishing and terminating the work area) requires that two or more work vehicles cross the offset zone in any one hour, traffic control will be in conformance with Index No. 602.
2. No special signing is required.
3. When a side road intersects the highway within the work area, additional TTC devices shall be placed in accordance with other applicable TCZ Indexes.
4. When construction activities encroach on a sidewalk refer to Index No. 660.
5. For general TCZ requirements and additional information, refer to Index No. 600.

SYMBOLS

- Work Area
- Lane Identification + Direction of Traffic

CONDITIONS

WHERE ANY VEHICLE, EQUIPMENT, WORKERS AND THEIR ACTIVITIES ARE BEHIND AN EXISTING BARRIER, MORE THAN 2' BEHIND THE CURB, OR 15' OR MORE FROM THE EDGE OF TRAVEL WAY.

LAST REVISION	REVISION	DESCRIPTION:	FDOT 2016 DESIGN STANDARDS	TWO-LANE, TWO-WAY, WORK OUTSIDE SHOULDER	INDEX NO.	SHEET NO.
07/01/05					601	1 of 1

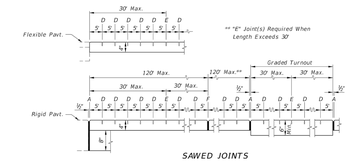

SAWED JOINTS

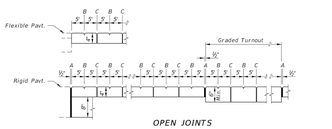

OPEN JOINTS

LONGITUDINAL SECTIONS
(NOT TO SCALE)

JOINT LEGEND

A- ½" Expansion Joints (Preformed Joint Filler)

B- ⅛" Dummy Joints, Tooled

C- 3/16" Formed Open Joints

D- 3/16" Saw Cut Joints, 1½" Deep (96 Hour) Max. 5' Centers

E- ½" Saw Cut Joints, 1½" Deep (12 Hour) Max. 30' Centers

F- ½" Expansion Joint When Run Of Sidewalk Exceeds 120'. Intermediate locations when called for in the plans or at locations as directed by the Engineer.

SIDEWALK JOINTS

NOTES FOR CONCRETE SIDEWALKS ON UNCURBED ROADWAYS

1. Sidewalks shall be constructed in accordance with Specification Section 522.
2. Detectable Warnings shall conform to the requirements described in Index No. 304. Detectable Warnings are not required for sidewalks that run continuous through driveways.
3. For TURNOUTS see Index No. 515.
4. Construct sidewalks with a 7'-0" thick Edge Beam through the limits of any surface mounted Pedestrian/Bicycle Picket Railing or Pipe Guiderail shown in the plans (see SIDEWALK WITH EDGEBEAM FOR SURFACE MOUNTED RAILINGS detail).
5. When driveways are newly constructed, reconstructed, or altered, cross slopes for discontinuous sidewalks shall not exceed 0.02.

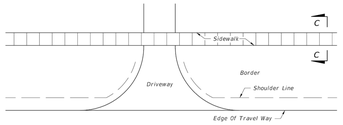

PLAN
CONTINUOUS SIDEWALK

SECTION CC

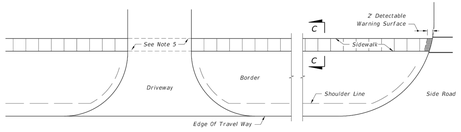

PLAN
DISCONTINUOUS SIDEWALK

CONCRETE SIDEWALK ON UNCURBED ROADWAYS

LAST REVISION	REVISION	DESCRIPTION:	FDOT 2016 DESIGN STANDARDS	CONCRETE SIDEWALK	INDEX NO.	SHEET NO.
07/01/13					310	2 of 2

SYMBOLS:

- Work Area
- Channelizing Device (See Index No. 600)
- Work Zone Sign
- Flagger
- Automated Flagger Assistance Devices (AFAD), With Gate
- Lane Identification + Direction of Traffic

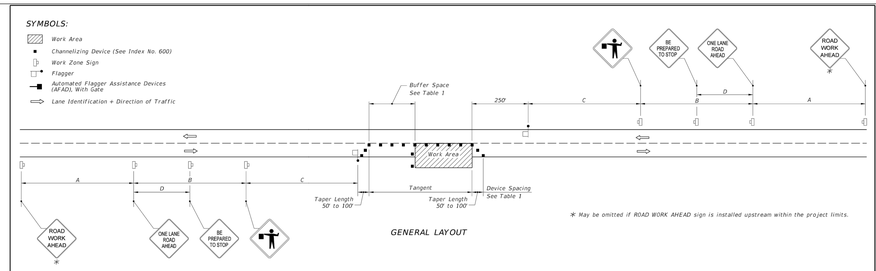

GENERAL LAYOUT

✳ May be omitted if ROAD WORK AHEAD sign is installed upstream within the project limits.

GENERAL NOTES:

1. Special Conditions may be required in accordance with these notes and the following sheets.
2. If the Work Area encroaches on the Centerline, use the Layout for Temporary Lane Shift to Shoulder on Sheet 2 only if the Existing Paved Shoulder width is sufficient to provide for an 11' lane between the Work Area and the Edge of Existing Paved Shoulder. Reduce the posted speed when appropriate.
3. Temporary Raised Rumble Strips:
   a. Use when both of the following conditions are met concurrently:
      i. Existing Posted Speed is 50 mph or greater;
      ii. Work duration is greater than 60 minutes.
   b. Use a consistent Strip color throughout the work zone.
   c. Place each Rumble Strip Set transversely across the lane at locations shown.
   d. Use Option 1 or Option 2 as shown on Sheet 2. Use only one option throughout work zone.
4. Additional one-way control may be provided by the following means:
   a. Flag-carrying vehicle;
   b. Official vehicle;
   c. Pilot vehicles;
   d. Traffic signals.

   When flaggers are the sole means of one-way control, the flaggers must be in sight of each other or in direct communication at all times.
5. When a side road intersects the highway within the TTC zone, place additional TTC devices in accordance with other applicable TCZ Indexes.
6. The two channelizing devices directly in front of the work area may be omitted provided vehicles in the work area have high-intensity rotating, flashing, oscillating, or strobe lights operating.
7. When Buffer Space cannot be attained due to geometric constraints, use the greatest attainable length, not less than 200 ft.
8. Railroad Crossings:
   a. If an active railroad crossing is located closer to the Work Area than the queue length plus 300 feet, extend the Buffer Space as shown on Sheet 2.
   b. If the queuing of vehicles across an active railroad crossing cannot be avoided, provide a uniformed traffic control officer or flagger at the highway-rail grade crossing to prevent vehicles from stopping within the highway-rail grade crossing, even if automatic train warning devices are in place.
9. ROAD WORK AHEAD and the BE PREPARED TO STOP signs may be omitted if all of the following conditions are met:
   a. Work operations are 60 minutes or less.
   b. Speed limit is 45 mph or less.
   c. There are no sight obstructions to vehicles approaching the work area for a distance equal to the Buffer Space shown in Table 1.
   d. Vehicles in the work area have high-intensity, rotating, flashing, oscillating, or strobe lights operating.
   e. Volume and complexity of the roadway has been considered.
   f. If a railroad crossing is present, vehicles will not queue across rail tracks.
   g. AFADs are not in use.
10. See Index 600 for general TCZ requirements and additional information.
11. Automated Flagger Assistance Devices (AFADs) may be used in accordance with the Notes on Sheet 3.

TABLE 1

Posted Speed	Maximum Spacing of Cones or Tubular Markers: On a Taper	Maximum Spacing of Cones or Tubular Markers: On a Tangent	Maximum Spacing of Type I or Type II Barricades/Panels/Drums: On a Taper	Maximum Spacing of Type I or Type II Barricades/Panels/Drums: On a Tangent	Distance Between Signs: A	Distance Between Signs: B	Distance Between Signs: C	Distance Between Signs: D	Buffer Space
25	20'	50'	20'	50'	200'	200'	200'	100'	155'
30	20'	50'	20'	50'	200'	200'	200'	100'	200'
35	20'	50'	20'	50'	200'	200'	200'	100'	250'
40	20'	50'	20'	50'	200'	200'	200'	100'	305'
45	20'	50'	20'	50'	350'	350'	350'	175'	360'
50	20'	50'	20'	100'	500'	500'	500'	250'	425'
55	20'	50'	20'	100'	2640'	1500'	1000'	500'	495'
60	20'	50'	20'	100'	2640'	1500'	1000'	500'	570'
65	20'	50'	20'	100'	2640'	1500'	1000'	500'	645'
70	20'	50'	20'	100'	2640'	1500'	1000'	500'	730'

CONDITIONS

WHERE ANY VEHICLE, EQUIPMENT, WORKERS OR THEIR ACTIVITIES ENCROACH THE AREA BETWEEN THE CENTERLINE AND A LINE 2' OUTSIDE THE EDGE OF TRAVEL WAY.

LAST REVISION	REVISION	DESCRIPTION:	FDOT 2016 DESIGN STANDARDS	TWO-LANE, TWO-WAY, WORK WITHIN THE TRAVEL WAY	INDEX NO.	SHEET NO.
07/01/15					603	1 of 3

No.	BY	REVISIONS	DATE	No.	BY	REVISIONS	DATE

QUENTIN L. HAMPTON ASSOCIATES, INC.
CONSULTING ENGINEERS
FLORIDA CERTIFICATE-of-AUTHORIZATION No. 626
PHONE: (386) 761-6810 FAX: (386) 761-3977

CITY of
EDGEWATER
VOLUSIA COUNTY, FLORIDA

LAMONT AND HUBBELL STREET STORMWATER IMPROVEMENTS

PROJECT No. EW111

M.O.T. DETAILS

DRAWN BY: MS

ANDREW M. GIANNINI, P.E.
FLORIDA REGISTRATION #46601

SHEET No. 13 OF 14

LEGEND

- INTERSECTION W/ A SIGNAL LIGHT
- TYPE B HIGH INTENSITY FLASHER
- INDICATES WORK AREA
- POSTED SPEED LIMIT
- EXISTING STOP SIGN BAR
- VARIABLE MESSAGE BOARD
- SIGN
- TYPE III BARRICADE W/ FLASHING BEACON

IT IS UNDERSTOOD AND AGREED THAT THE CONTRACTOR DEPLOYING THE MAINTENANCE OF TRAFFIC PLAN HEREIN WILL AT ALL TIMES, ASSUME ANY AND ALL RISK OF AND INDEMNIFY, DEFEND, AND HOLD HARMLESS THE ENGINEER AND THE OWNER FROM AND AGAINST ANY AND ALL LOSSES, DAMAGES, COSTS AND EXPENSES ARISING IN ANY MANNER WHATSOEVER ON ACCOUNT OF IN ANY WAY RESULTING FROM THE ACTS OR OMISSIONS OF THE CONTRACTOR OR ITS OFFICERS, EMPLOYEES OR AGENTS IN IMPLEMENTING AND MAINTAINING THIS MAINTENANCE OF TRAFFIC PLAN. THE CONTRACTOR AGREES TO ITS ASSUMPTIONS OF RISKS AND OBLIGATIONS TO INDEMNIFY THE ENGINEER AND THE OWNER RELATED TO CONTRACTORS ACTIVITIES.

GENERAL M.O.T. NOTES:

1. ALL SIGNS AND BARRICADES SHALL BE FABRICATED IN ACCORDANCE WITH THE MANUAL OF UNIFORM TRAFFIC CONTROL DEVICES.
2. CAUTION SHALL BE EXERCISED IN SIGN PLACEMENT TO AVOID BLOCKING SIGHT DISTANCE AT INTERSECTIONS OR ANY EXISTING TRAFFIC CONTROL SIGNS OR DEVICES.
3. ALL SIGNS SHALL BE POST MOUNTED UNLESS OTHERWISE NOTED. FLASHING BEACONS TO BE INSTALLED AS SHOWN.
4. DURING LANE CLOSURE, FLAGGERS SHALL USE STOP/SLOW PADDLES. THE USE OF FLAGS IS NOT PERMITTED.
5. CONTRACTOR WILL BE RESPONSIBLE FOR ADEQUATELY BARRICADING ALL AREAS DEEMED HAZARDOUS FOR VEHICULAR ACCESS INSIDE CONSTRUCTION ZONE.
6. LOCAL RESIDENTS AND EMERGENCY RESPONSE VEHICLES WILL BE PERMITTED ACCESS AT ALL TIMES.

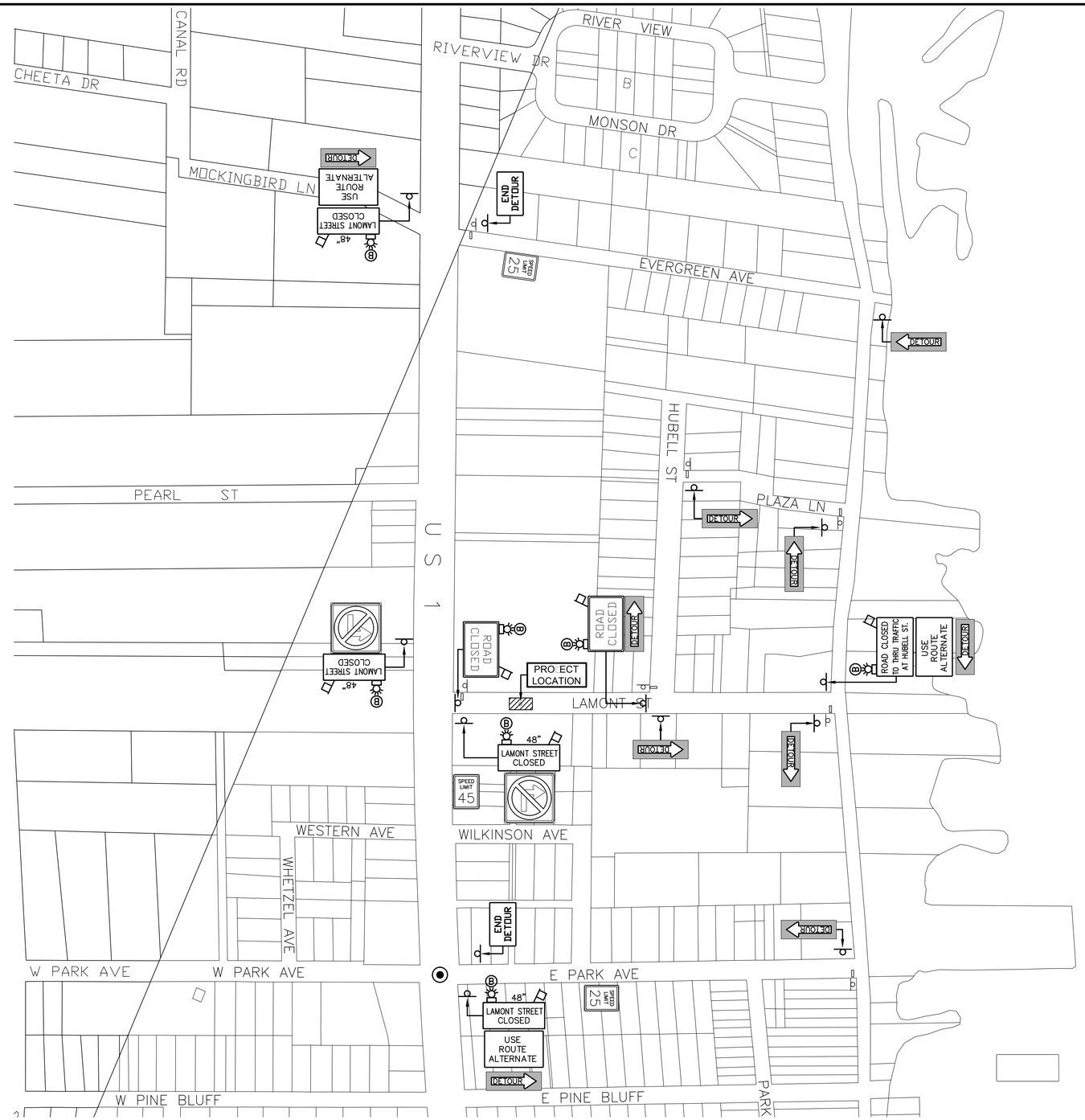

FDOT R/W CONSTRUCTION NOTE

NOTES:

1. ALL CONSTRUCTION WITHIN FDOT RIGHT-OF-WAY SHALL CONFORM TO THE LATEST EDITIONS OF THE FDOT DESIGN STANDARD INDICES, THE FDOT STANDARD SPECIFICATIONS FOR ROAD AND BRIDGE CONSTRUCTION, AND THE FDOT UTILITY ACCOMMODATIONS MANUAL.
2. IF REQUIRED FOR CONSTRUCTION OR REPAIR, SAW CUT SIDEWALK(S) AT EXISTING JOINTS. REMOVE AND REPLACE FULL SECTIONS.
3. ALL SIDEWALK REPLACEMENT WITHIN FDOT R.O.W. SHALL BE IN ACCORDANCE WITH THE LATEST EDITION OF FDOT INDEX 310.

POSTED SPEED LIMITS:

U.S. HIGHWAY No.1 = 45 MPH
NORTH RIVERSIDE DR. = 25 MPH

No.	BY	REVISIONS	DATE	No.	BY	REVISIONS	DATE

QUENTIN L. HAMPTON ASSOCIATES, INC.
CONSULTING ENGINEERS
FLORIDA CERTIFICATE-of-AUTHORIZATION No. 626
PHONE: (386) 761-6810 FAX: (386) 761-3977

CITY of
EDGEWATER
VOLUSIA COUNTY, FLORIDA

LAMONT AND HUBBELL STREET STORMWATER IMPROVEMENTS

PROJECT No. EW111

M.O.T. DETOUR PLAN

DRAWN BY: MS

ANDREW M. GIANNINI, P.E.
FLORIDA REGISTRATION #46601

SHEET No.
14
OF 14

S:\EW\EW111 Lamont & Hubbell Area Stormwater Improvements\Production\Design\EW111 100% Plans.dwg 12/14/2016 11:49:00 AM, DWG To PDF.pc3